JVC

SCHEMATIC DIAGRAMS

DVD DIGITAL CINEMA SYSTEM

TH-S1

CD-ROM No.SML200408

Area suffix

B ---------- U.K.
E ---------- Continental Europe
EN ---------- Northern Europe
EV ---------- Eastern Europe
EE -------- Russian Federation

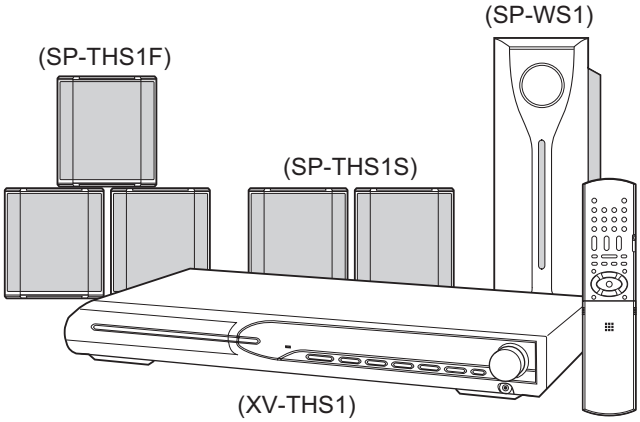

Contents

Block diagram ---------- 2-1
Standard schematic diagrams ---------- 2-2
Printed circuit boards ---------- 2-10 to 13

COPYRIGHT ⓒ2004 Victor Company of Japan, Limited.

No.MB305SCH
2004/8

In regard with component parts appearing on the silk-screen printed side (parts side) of the PWB diagrams, the parts that are printed over with black such as the resistor (▬), diode (▮) and ICP (●) or identified by the "⚠" mark nearby are critical for safety.

Block diagram

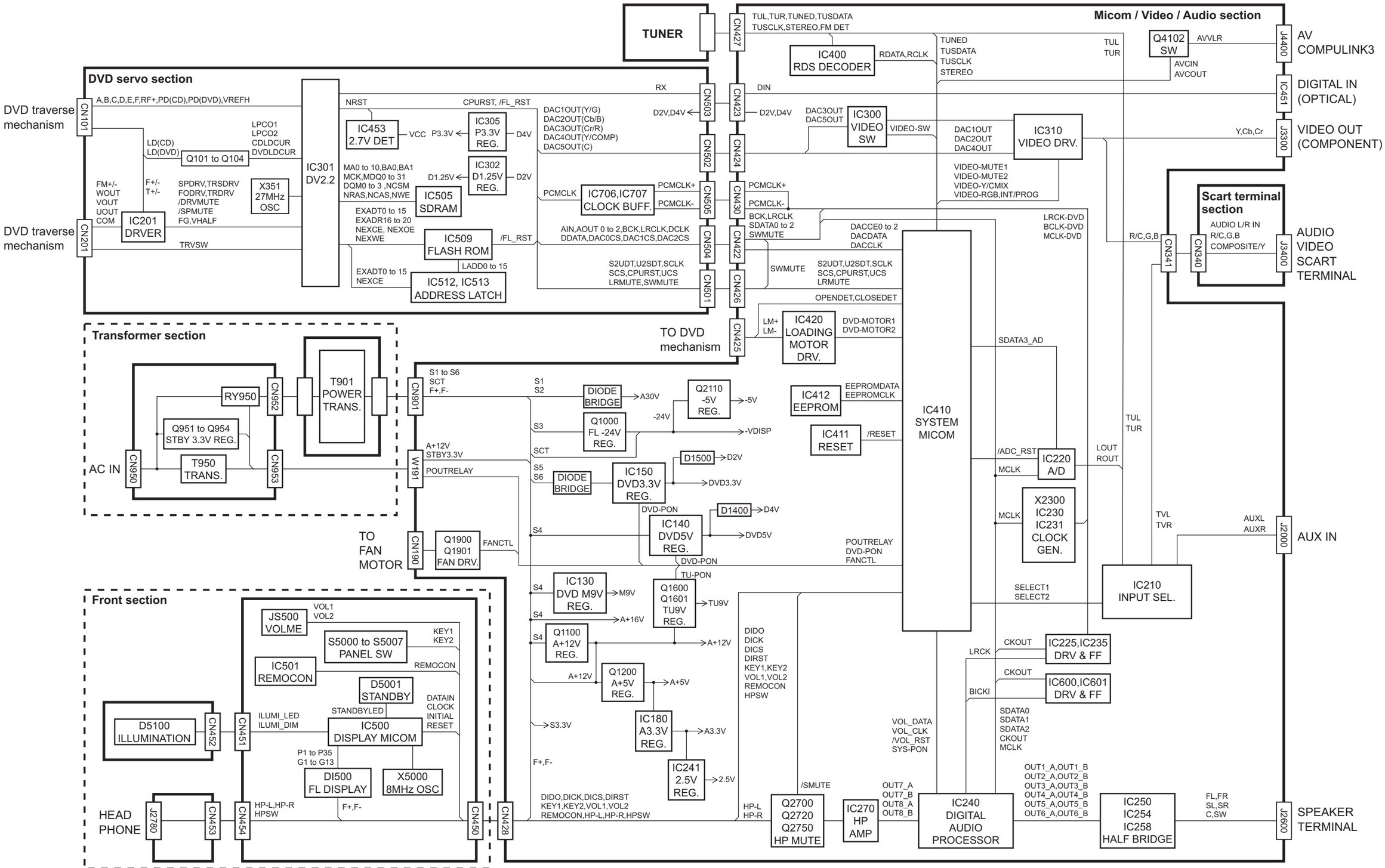

Standard schematic diagrams

■ Transformer section

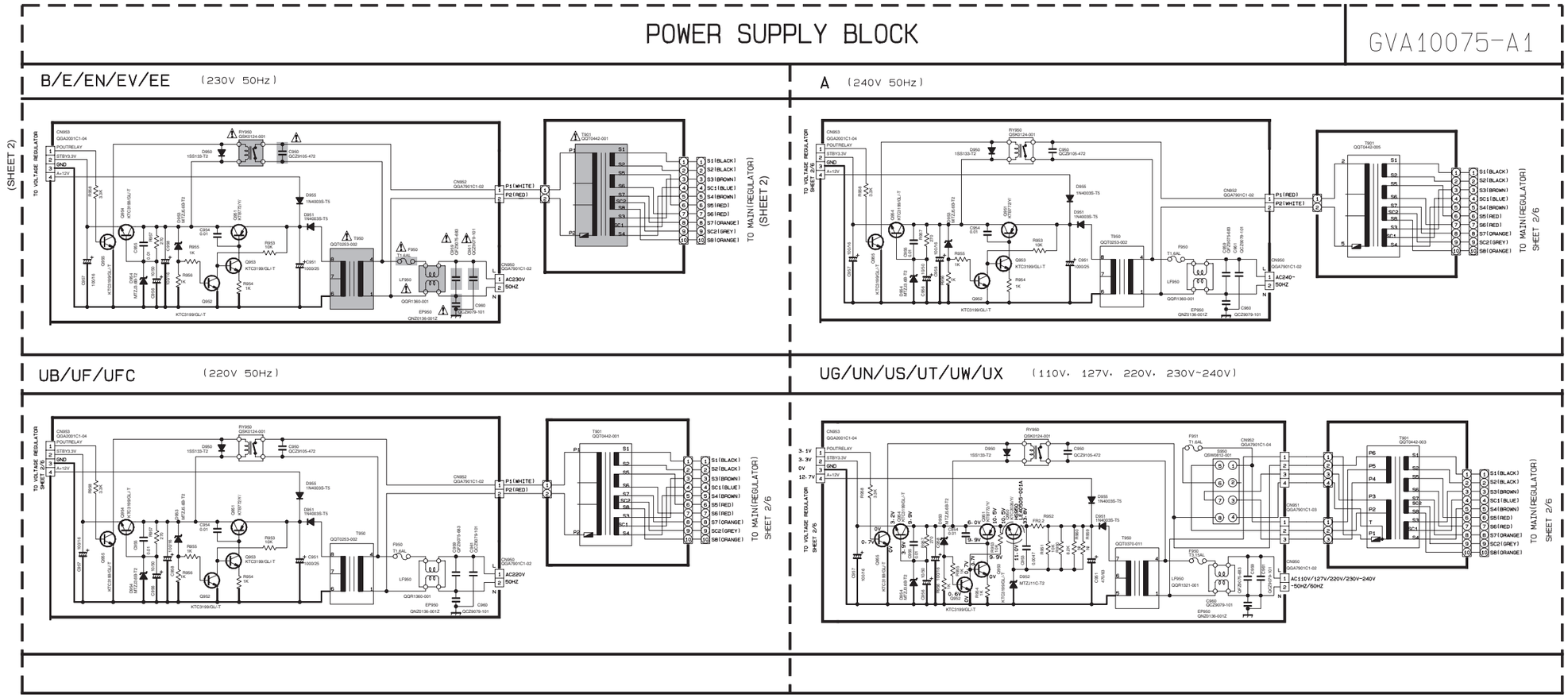

VERSION CODES

A：AUSTRALIA
B：GREAT BRITAIN
E：GERMANY/FRANCE/HOLLAND
EE：RUSSIA
EN：SWEDEN/NORWAY/FINLAND/DENMARK
EV：EAST EUROPE
UB：HONG KONG
UF：CHINA
UG：TURKEY/EGYPT/SOUTHAFRICA
US：SINGAPORE
UT：TAIWAN
UW：BRAZIL/MEXICO/PERU
UX：SAUDI ARABIA
UY：ARGENTINA

⚠ Parts are safety assurance parts. When replacing those parts make sure to use the specified one.

VOLTAGE SELECTOR LOCATION

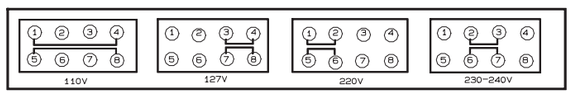

NOTES

1. VOLTAGE ARE DC-MEASURED WITH A DIGITAL VOLT METER OR OSCILLOSCOPE WITHOUT INPUT SIGNAL
   INSIDE BRACKET VALUES ARE OTHER FUNCTIONS
2. UNLESS OTHERWISE SPECIFIED- RESISTOR ARE 1/4W ±5% CARBON RESISTOR
   ALL RESISTOR VALUES ARE IN OHM.
   ALL CAPACITOR ARE CERAMIC CAPACITOR OR MYLAR CAPAPACITOR.
   ALL CAPACITANCE VALUES ARE IN μF(=mpF).
   ALL INDUCTANCE VALUES ARE IN μH(=mmH).
   ALL E:CAPACITOR ARE SHOWN IN THE FORM OF CAPACITANCE (uF)/RATED VOLTAGE(V).
3. FOR VERSION B/E/EN/EV/EE/UB/UF/A/J/C/DOM CIRCUIT VOLTAGE,
   PLEASE REFER TO UG/UJ/UN/US/UT/UW/UX/ CIRCUIT VOLTAGE

SHEET 1

■ Regulator section

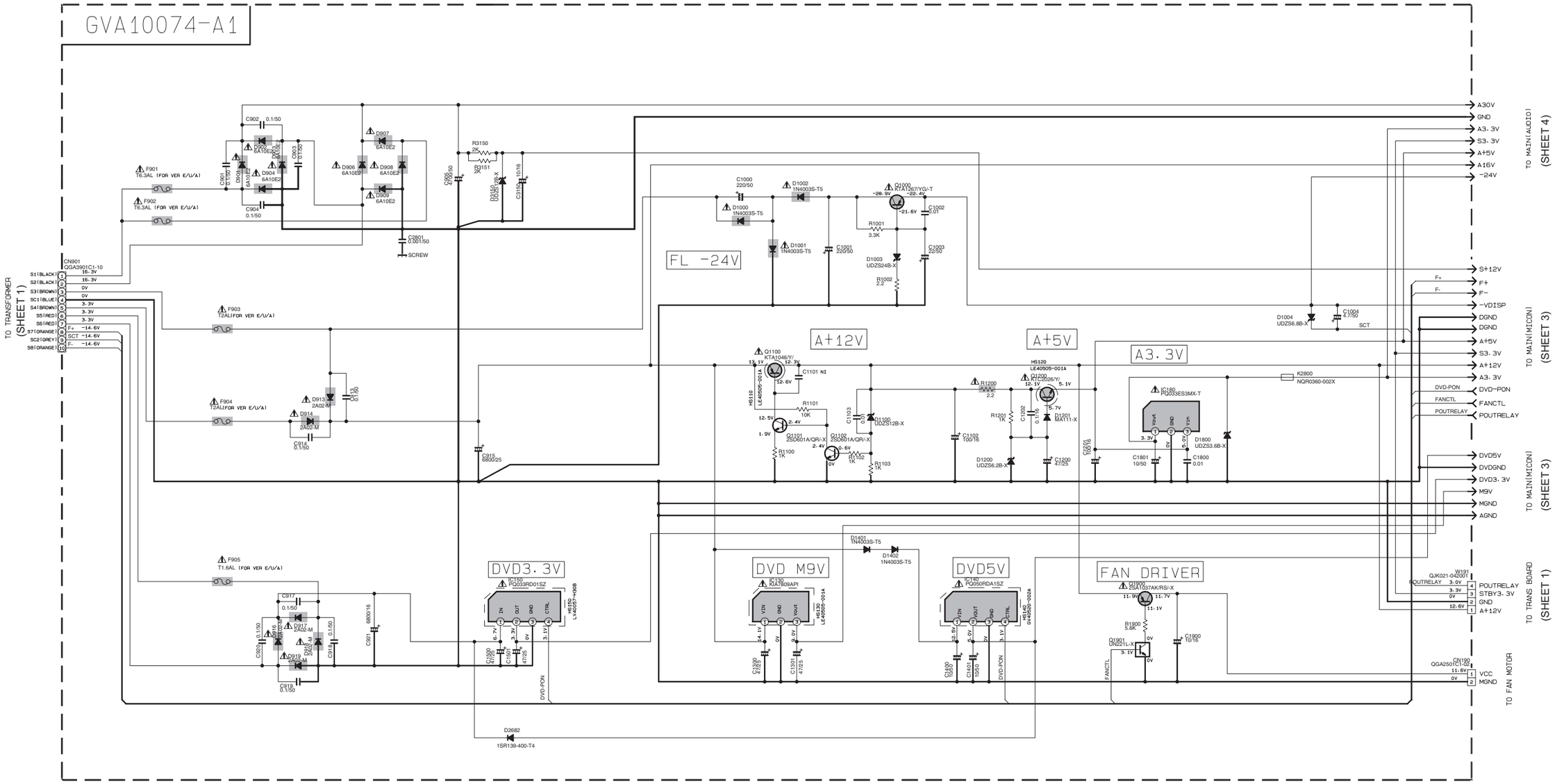

SHEET 2

■ Micom section

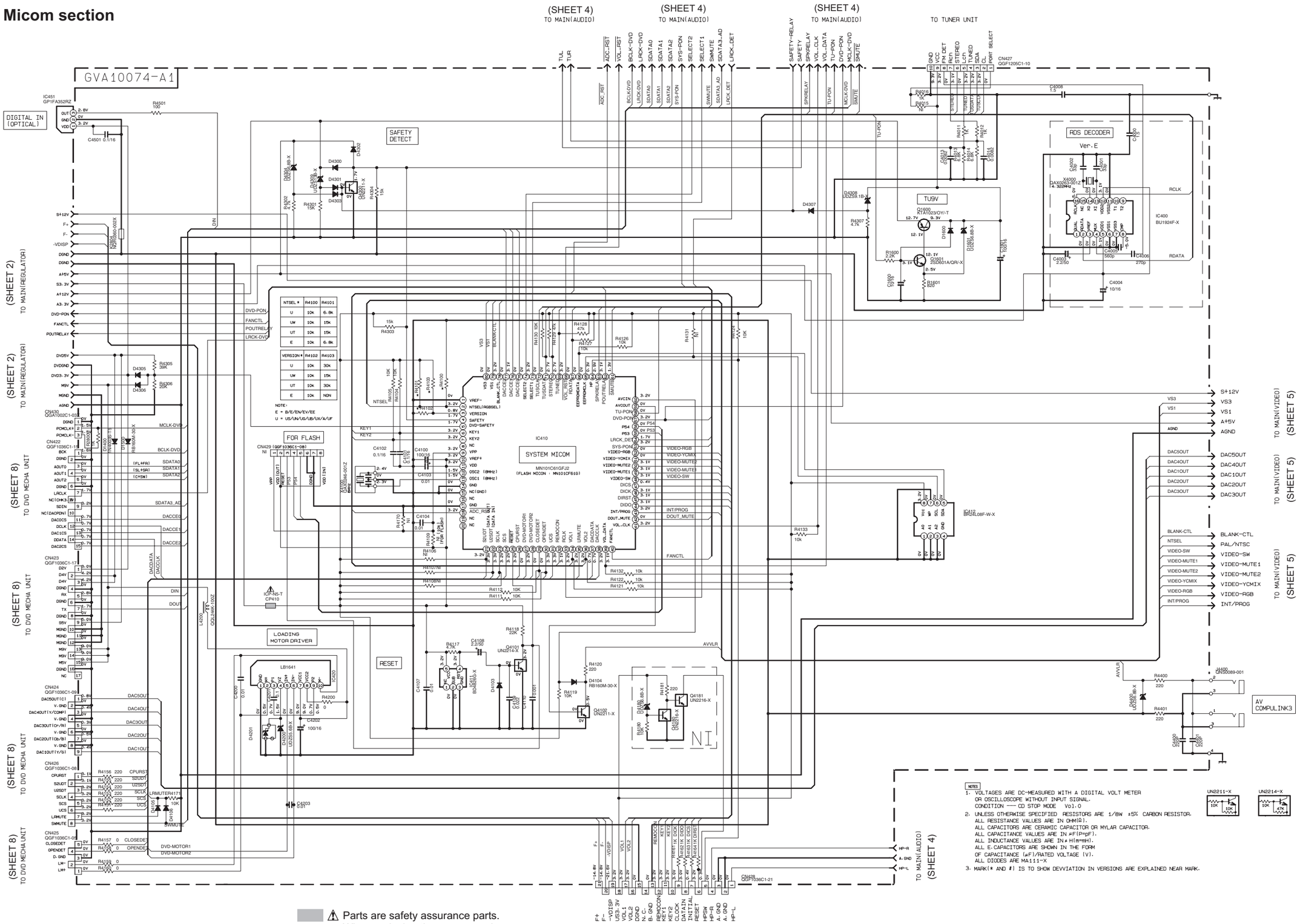

Parts are safety assurance parts. When replacing those parts make sure to use the specified one.

SHEET 3

■ Audio section

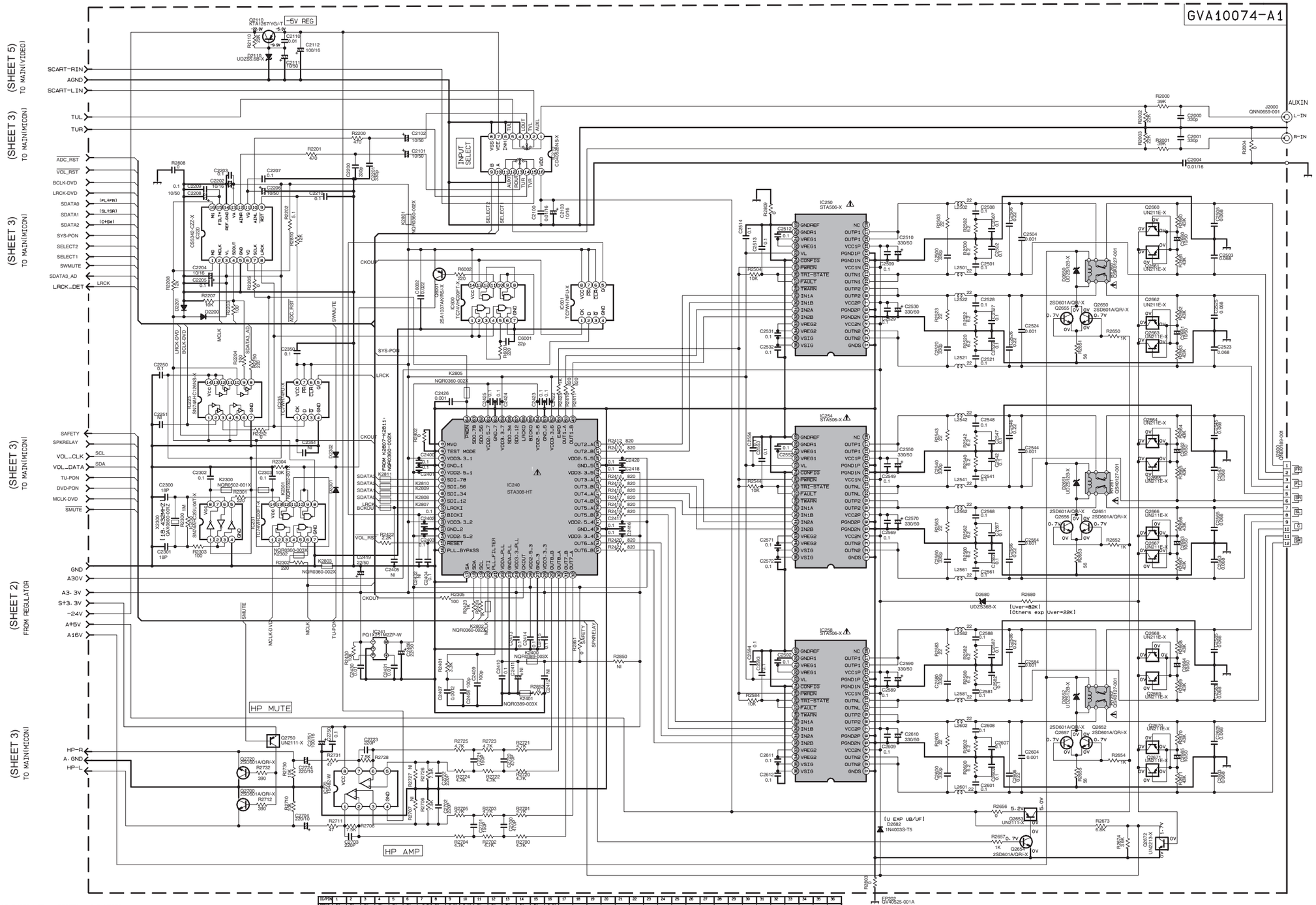
GVA10074-A1
(SHEET 5) TO MAIN(VIDEO)
(SHEET 3) TO MAIN(MICON)
(SHEET 2) FROM REGULATOR
SCART-RIN
AGND
SCART-LIN
TUL
TUR
ADC_RST
VOL_RST
BCLK-DVD
LRCK-DVD
SDATA0
SDATA1
SDATA2
SYS-PON
SELECT2
SELECT1
SWMUTE
SDATA3_AD
LRCK_DET
SAFETY
SPKRELAY
VOL_CLK
VOL_DATA
TU-PON
DVD-PON
MCLK-DVD
SMUTE
GND
A30V
A3.3V
S+3.3V
-24V
A+5V
A16V
HP-R
A.GND
HP-L
-5V REG
INPUT SELECT
HP MUTE
HP AMP
AUXIN
L-IN
R-IN
IC250 STA506-X
IC254 STA506-X
IC258 STA506-X
IC240 STA308-HT
IC400 TC7SH08FU-X
IC401 TC7SH08FU-X
IC223 SN74AHC1G08-X
IC224 TC7SH08FU-X
IC225 TC7SH08FU-X
IC231 TC7SH08FU-X
IC232 TC7SH08FU-X
IC233 TC7SH08FU-X
IC234 TC7SH08FU-X
IC235 TC7SH08FU-X
IC236 TC7SH08FU-X
IC237 TC7SH08FU-X
IC238 TC7SH08FU-X
IC239 TC7SH08FU-X
IC241 TC7SH08FU-X
IC242 TC7SH08FU-X
IC243 TC7SH08FU-X
IC244 TC7SH08FU-X
IC245 TC7SH08FU-X
IC246 TC7SH08FU-X
IC247 TC7SH08FU-X
IC248 TC7SH08FU-X
IC249 TC7SH08FU-X
IC250 TC7SH08FU-X
IC251 TC7SH08FU-X
IC252 TC7SH08FU-X
IC253 TC7SH08FU-X
IC254 TC7SH08FU-X
IC255 TC7SH08FU-X
IC256 TC7SH08FU-X
IC257 TC7SH08FU-X
IC258 TC7SH08FU-X
IC259 TC7SH08FU-X
IC260 TC7SH08FU-X

■ Video section

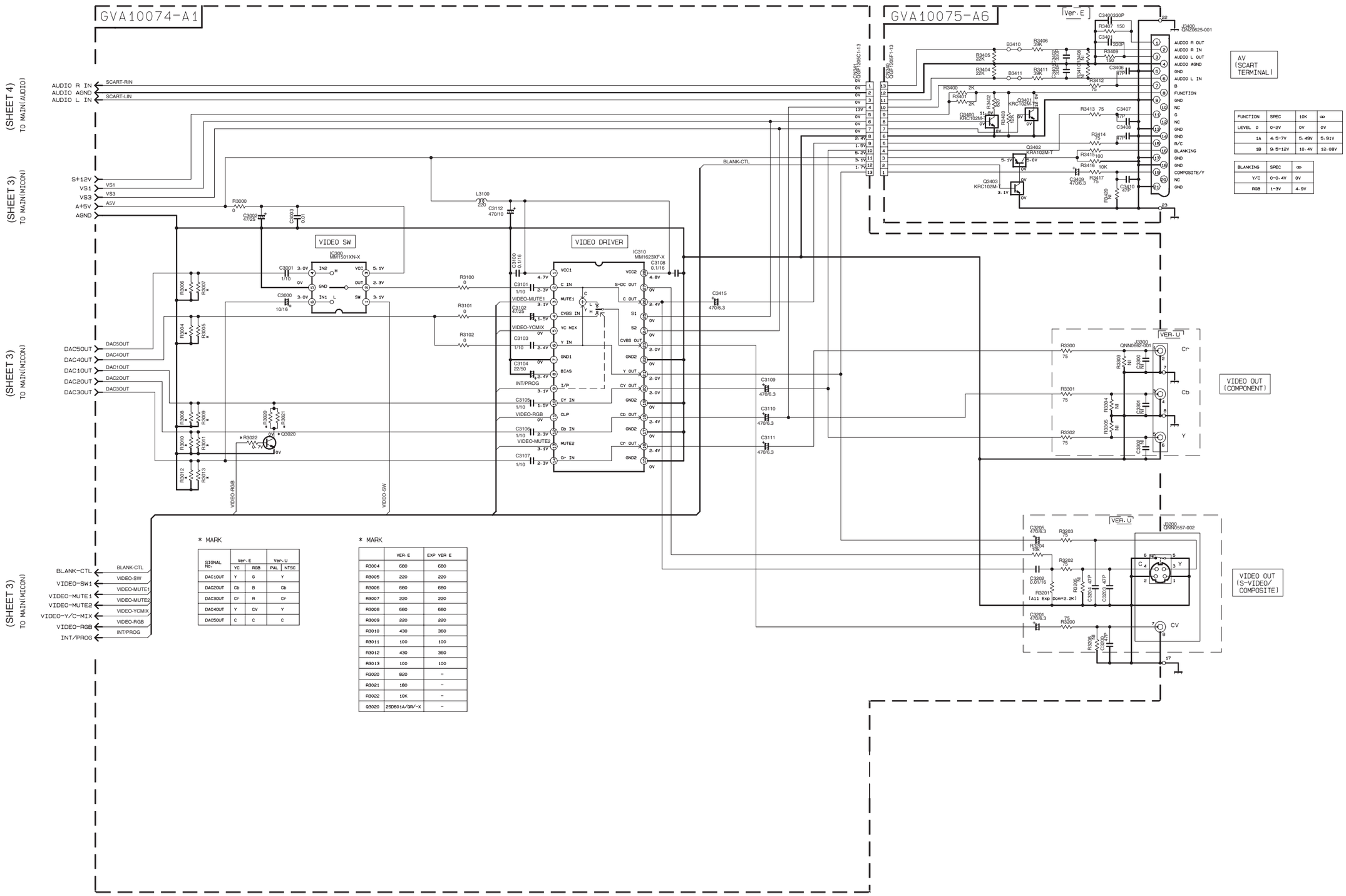

FUNCTION	SPEC	10K	∞
LEVEL 0	0-2V	0V	0V
1A	4.5-7V	5.49V	5.91V
1B	9.5-12V	10.4V	12.08V

BLANKING	SPEC	∞
Y/C	0-0.4V	0V
RGB	1-3V	4.9V

* MARK

SIGNAL No.	Ver.E		Ver.U	
	YC	RGB	PAL	NTSC
DAC1OUT	Y	G	Y	
DAC2OUT	Cb	B	Cb	
DAC3OUT	Cr	R	Cr	
DAC4OUT	Y	CV	Y	
DAC5OUT	C	C	C	

* MARK

	VER.E	EXP VER E
R3004	680	680
R3005	220	220
R3006	680	680
R3007	220	220
R3008	680	680
R3009	220	220
R3010	430	360
R3011	100	100
R3012	430	360
R3013	100	100
R3020	820	–
R3021	180	–
R3022	10K	–
Q3020	2SD601A/GR/-X	–

SHEET 5

■ Front section

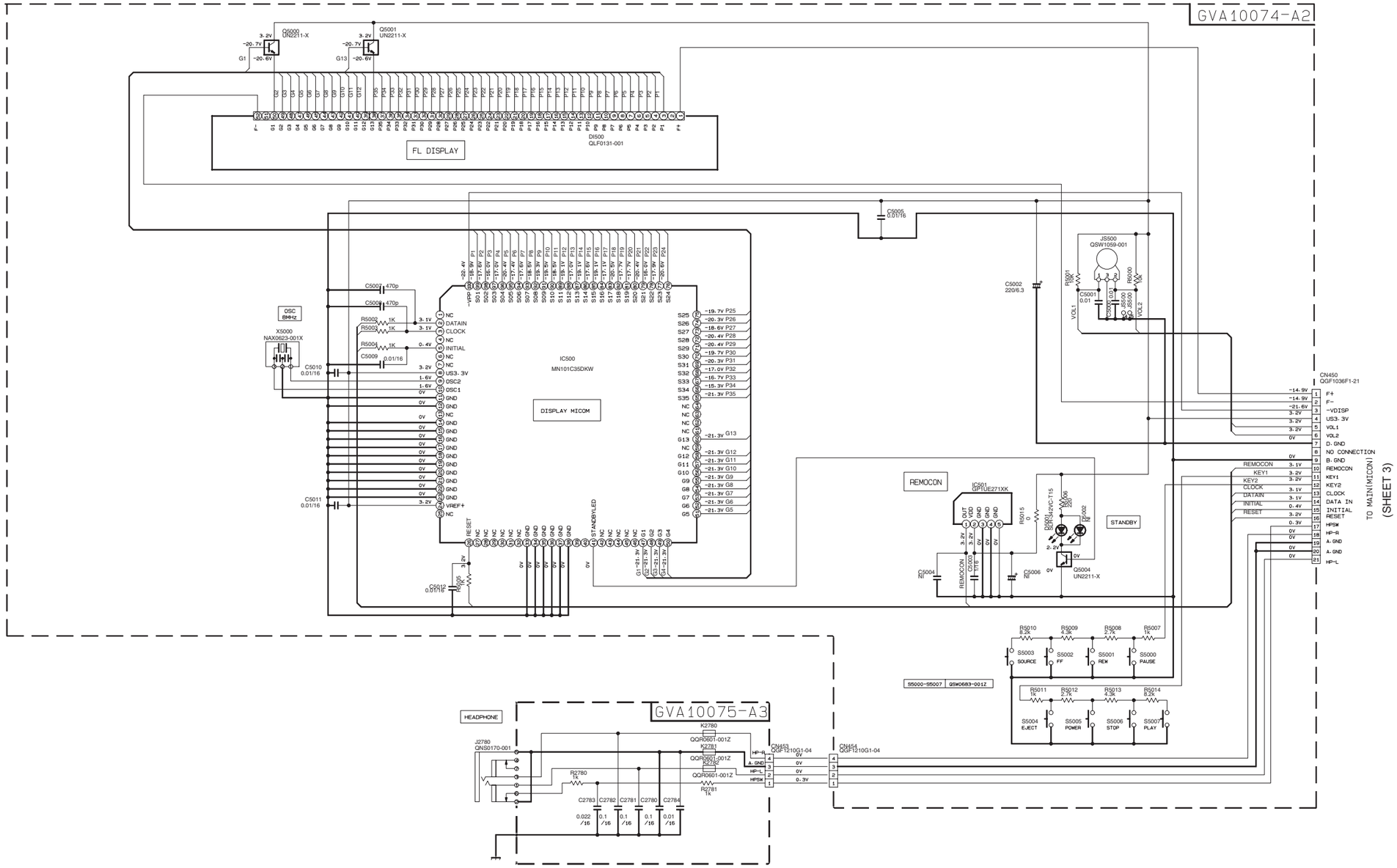

NOTES

1. VOLTAGES ARE DC-MEASURED WITH A DIGITAL VOLT METER OR OSCILLOSCOPE WITHOUT INPUT SIGNAL.
   CONDITION —— CD STOP MODE Vol. 0
2. UNLESS OTHERWISE SPECIFIED RESISTORS ARE 1/8W ±5% CARBON RESISTOR.
   ALL RESISTANCE VALUES ARE IN OHM(Ω).
   ALL CAPACITORS ARE CERAMIC CAPACITOR OR MYLAR CAPACITOR.
   ALL CAPACITANCE VALUES ARE IN μF(P=pF).
   ALL INDUCTANCE VALUES ARE IN μH(m=mH).
   ALL E.CAPACITORS ARE SHOWN IN THE FORM OF CAPACITANCE (μF)/RATED VOLTAGE (V).
   ALL DIODES ARE MA111-X
3. MARK(* AND #) IS TO SHOW DEVVIATION IN VERSIONS ARE EXPLAINED NEAR MARK.

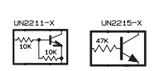

SHEET 6

■ DVD servo section (1/2)

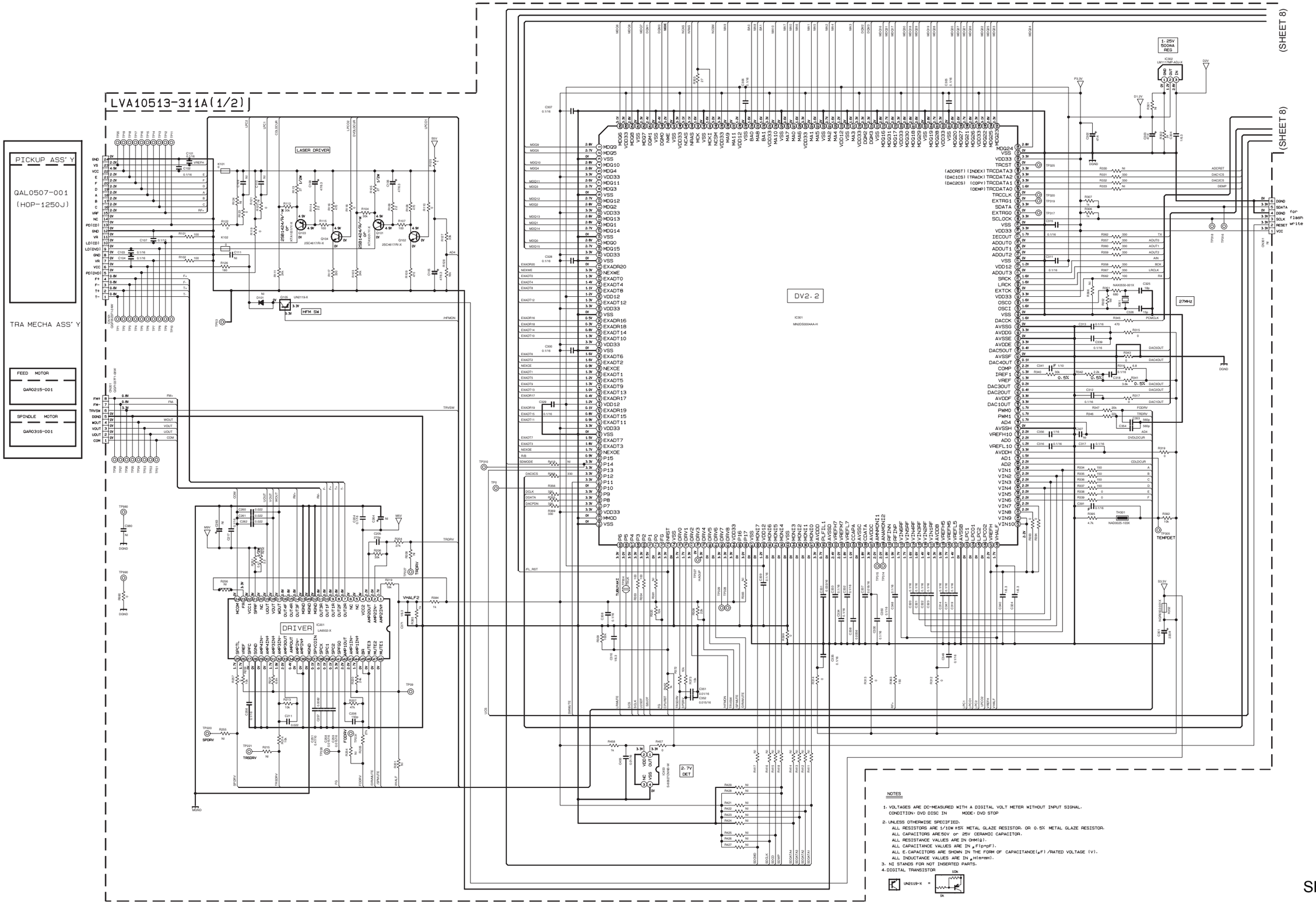

SHEET 7

■ DVD servo section (2/2)

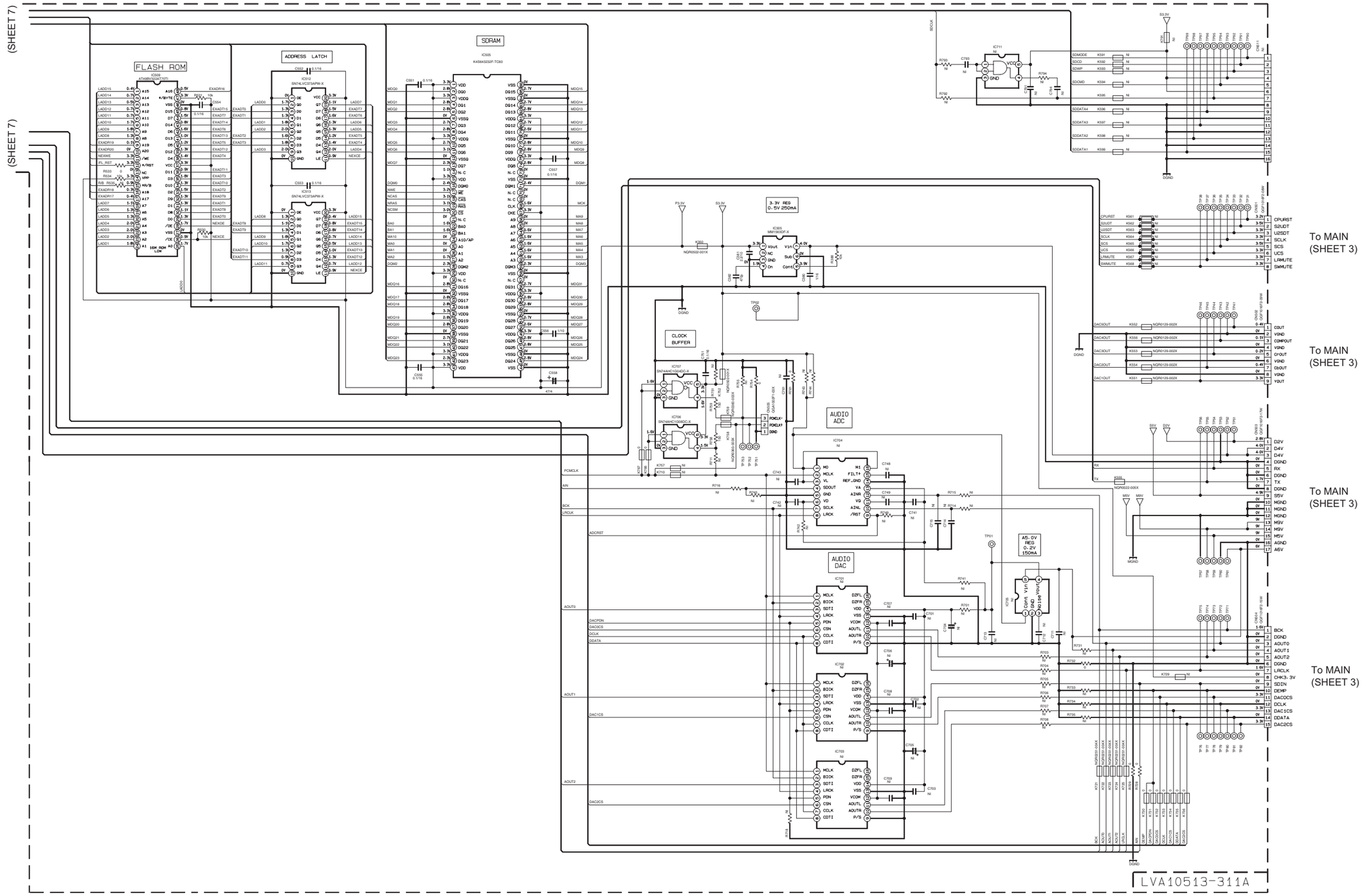

NOTES

1. VOLTAGES ARE DC-MEASURED WITH A DIGITAL VOLT METER WITHOUT INPUT SIGNAL.
   CONDITION:DVD DISC IN MODE:DVD STOP

2. UNLESS OTHERWISE SPECIFIED.
   ALL RESISTORS ARE 1/10W ±5% METAL GLAZE RESISTOR. OR 0.5% METAL GLAZE RESISTOR.
   ALL CAPACITORS ARE 50V OR 25V CERAMIC CAPACITOR.
   ALL RESISTANCE VALUES ARE IN OHM(Ω).
   ALL CAPACITANCE VALUES ARE IN μF(p=pF).
   ALL E.CAPACITORS ARE SHOWN IN THE FORM OF CAPACITANCE[μF]/RATED VOLTAGE [V].
   ALL INDUCTANCE VALUES ARE IN μH(m=mH).
3. NI STANDS FOR NOT INSERTED PARTS.

SHEET 8