MIAN SCHEMATIC DIAGRAM

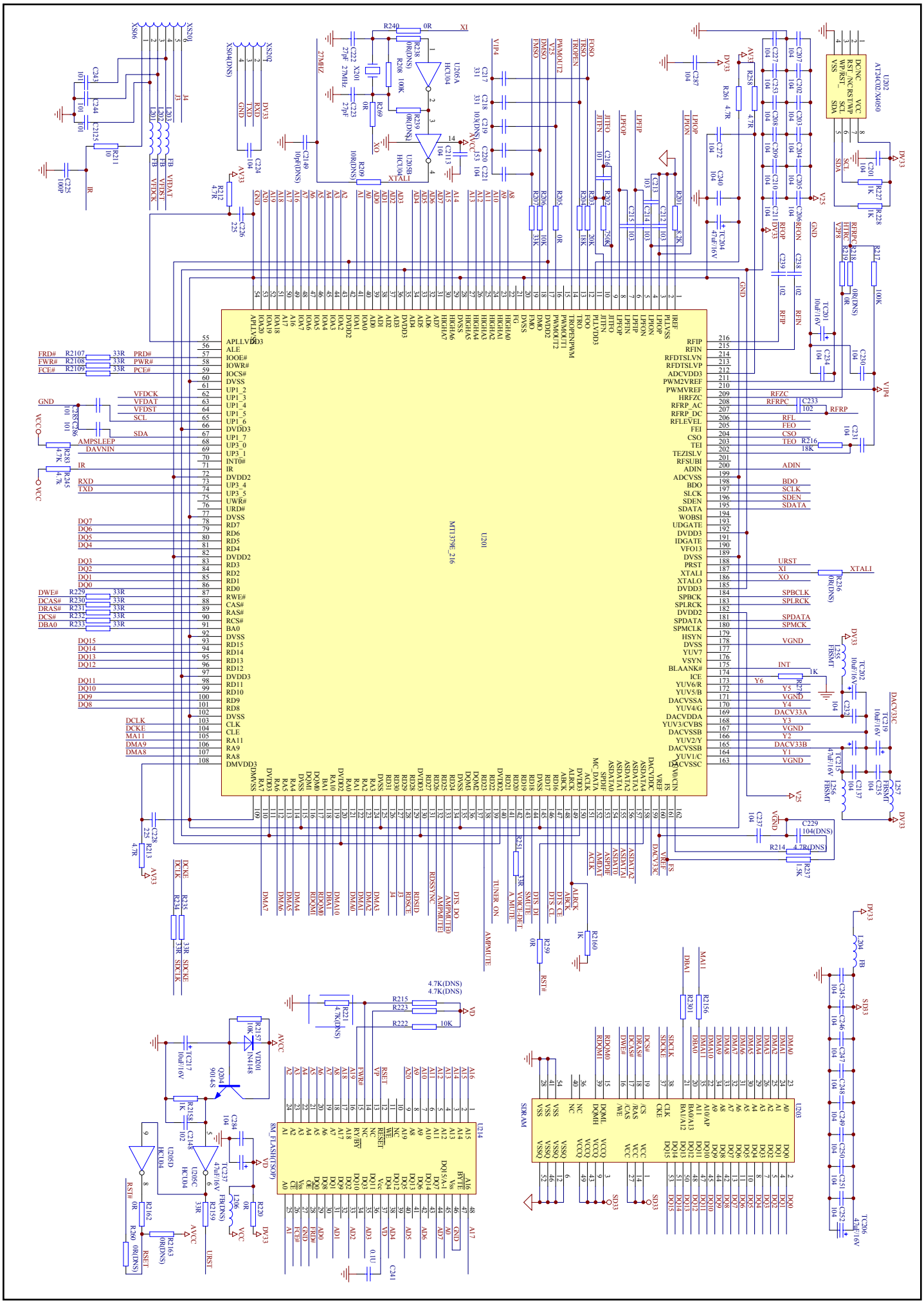

9.SCHEMATIC & P.C.B WIRING DIAGRAM

FRONT SCHEMATIC DIAGRAM

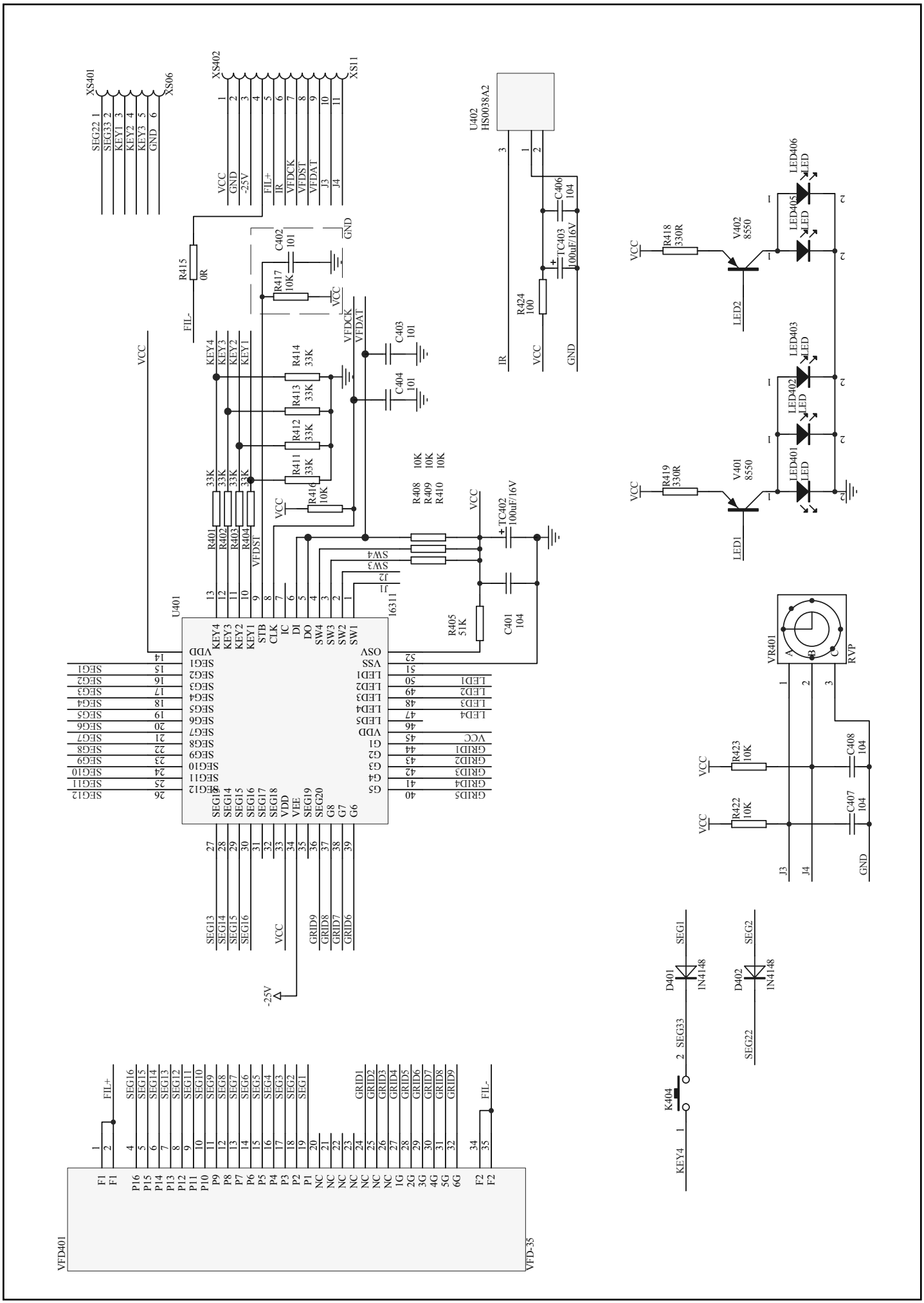

SUBSIDIARY FRONT SCHEMATIC DIAGRAM

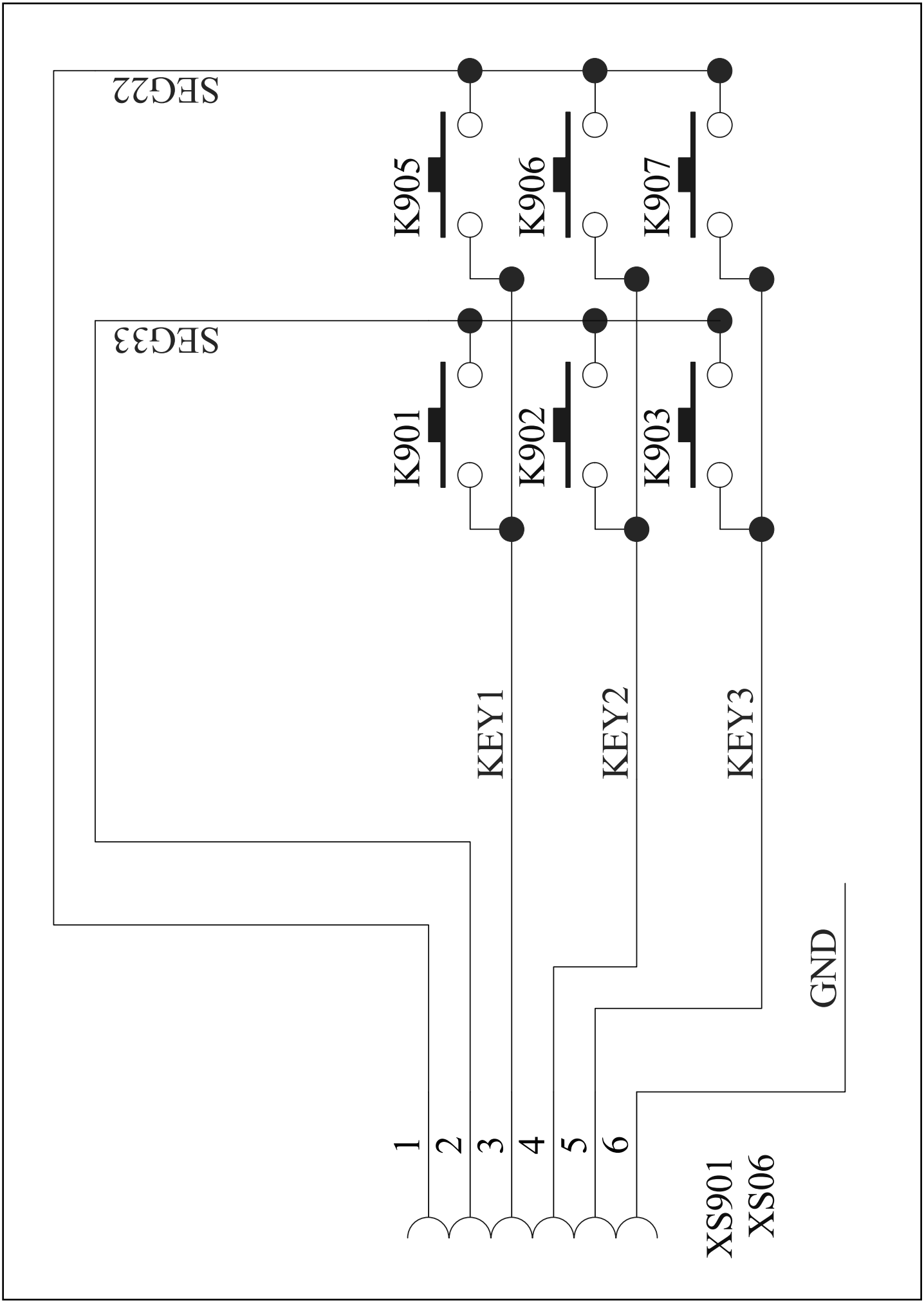

POWER SOURCE/AMPLIFIER BOARD SCHEMATIC DIAGRAM

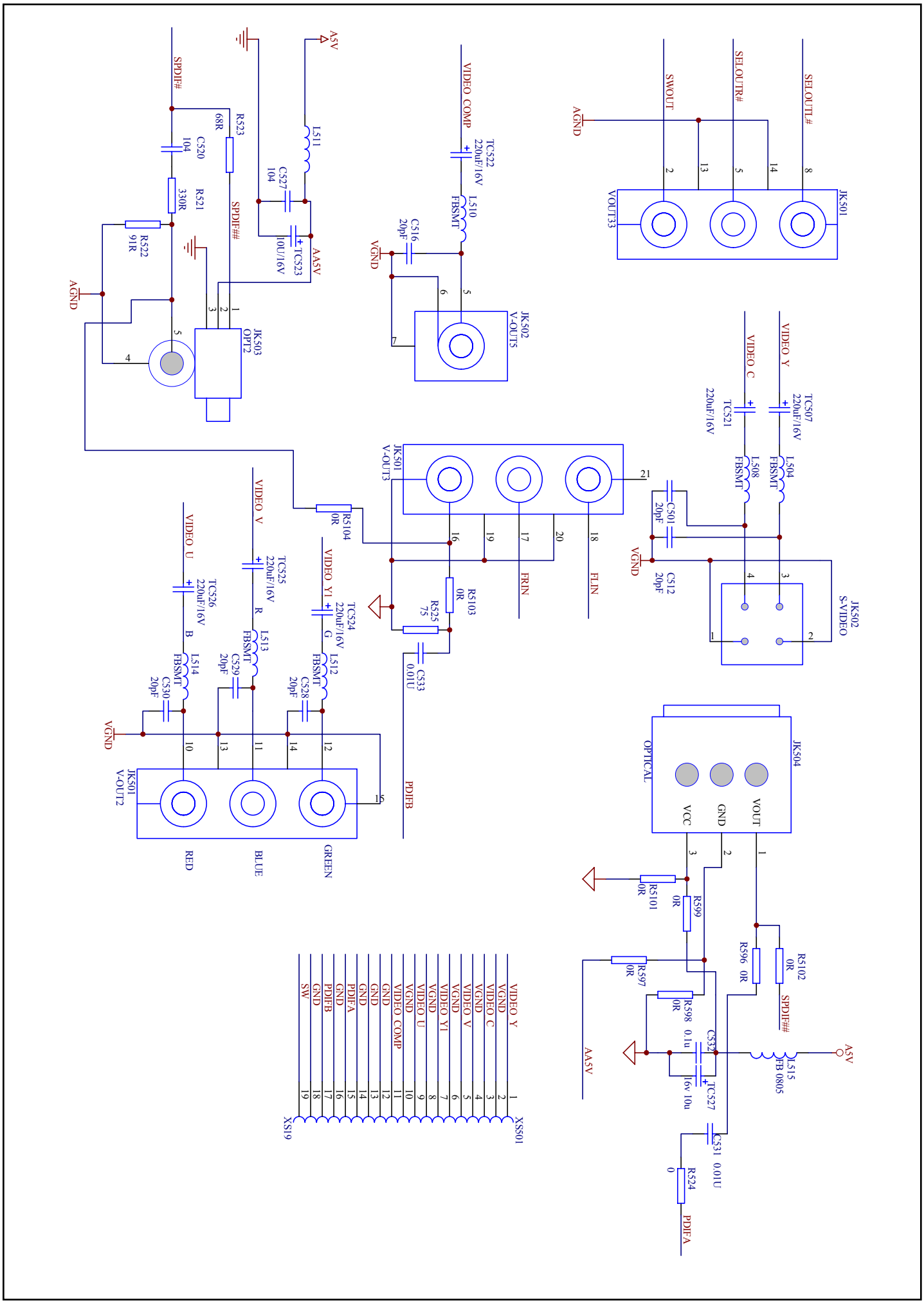

POWER SOURCE/AMPLIFIER BOARD SCHEMATIC DIAGRAM

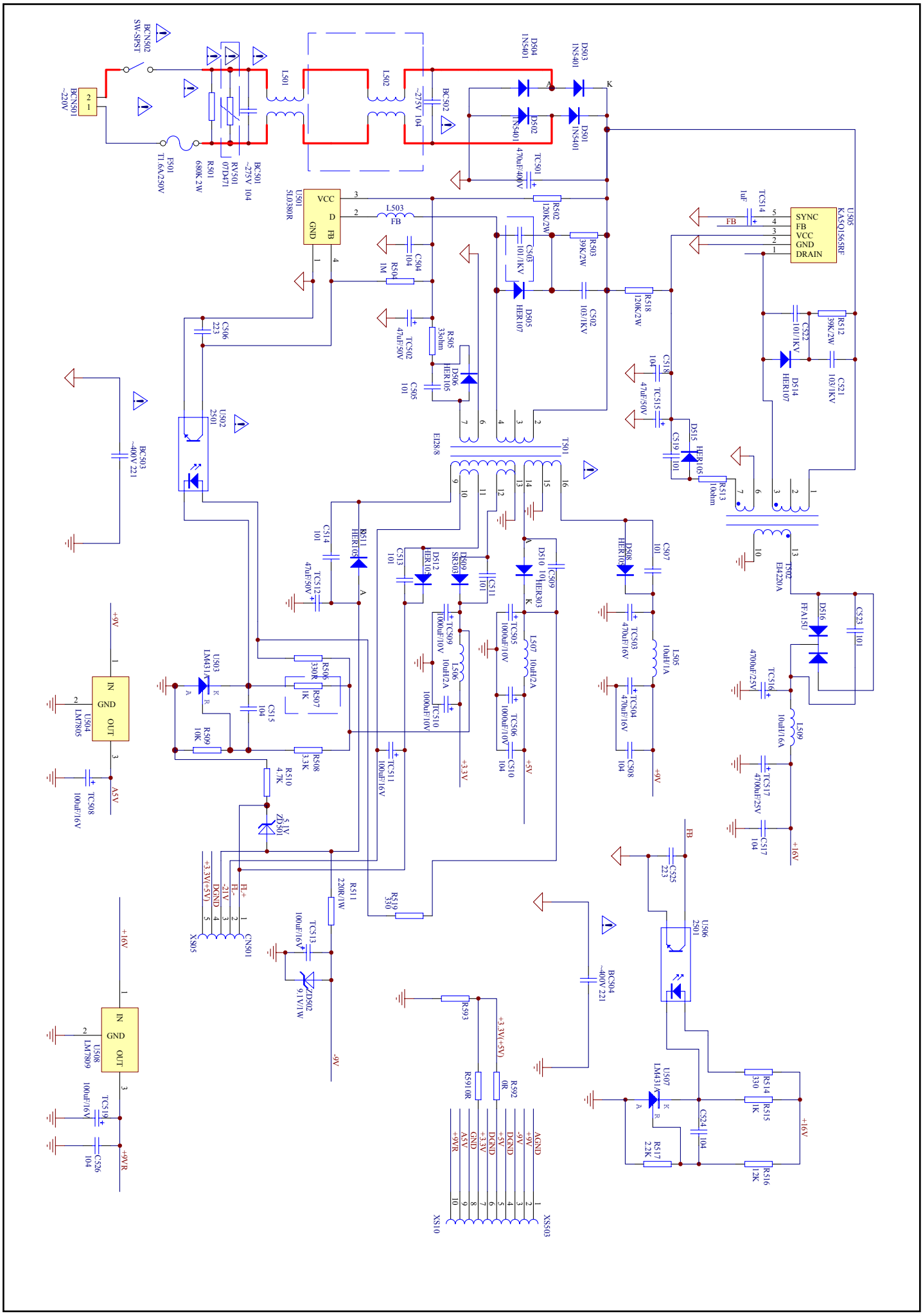

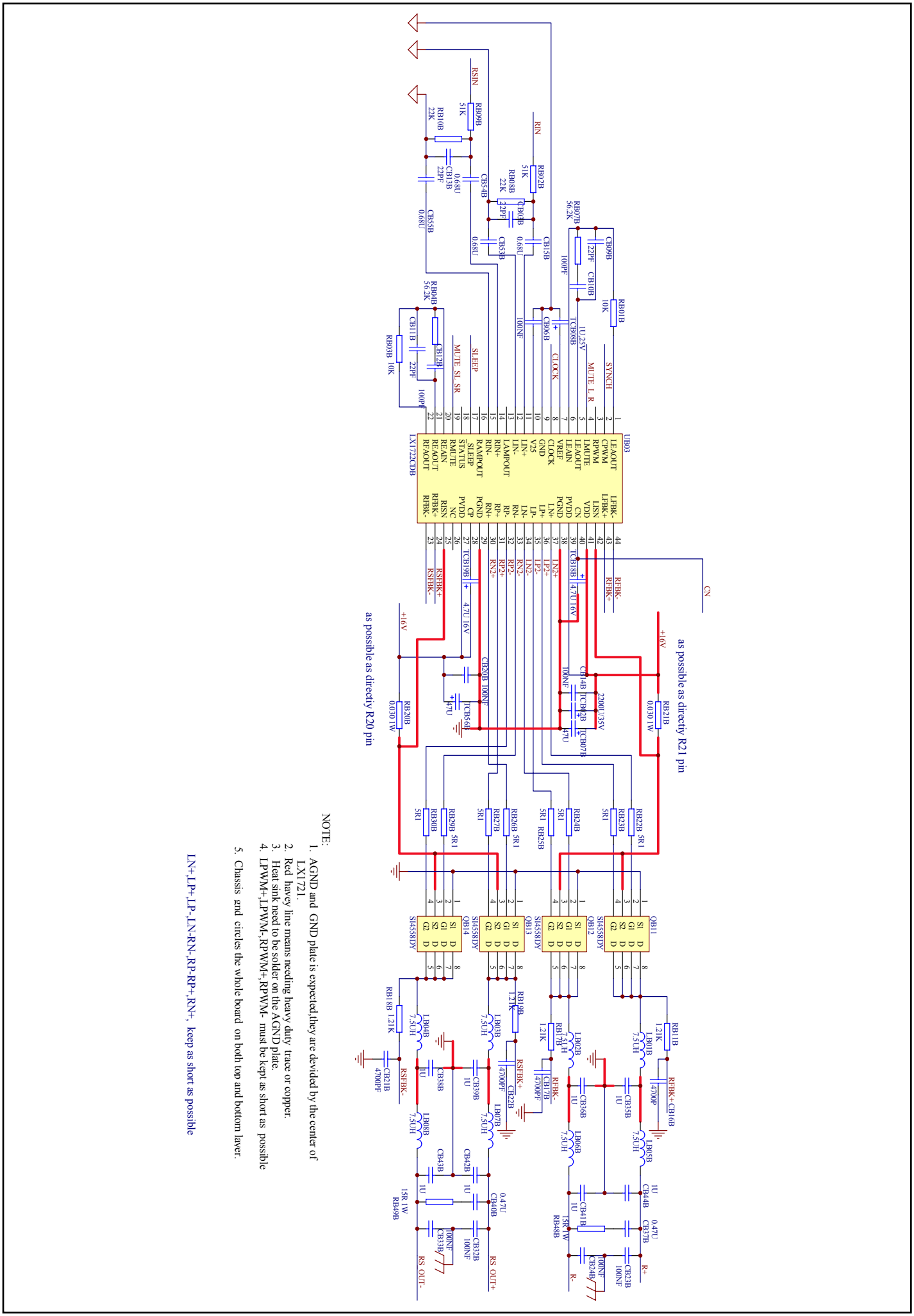
UB03
LX1722CDB
as possible as directly R21 pin
as possible as directly R20 pin
CN
+16V
RSIN
RIN
SYNCH
MUTE_L_R
CLOCK
SLEEP
MUTE_SL_SR
RS OUT+
RS OUT-
R+
R-
NOTE:
1. AGND and GND plate is expected,they are devided by the center of LX1721.
2. Red havey line means needing heavy duty trace or copper.
3. Heat sink need to be solder on the AGND plate.
4. LPWM+,LPWM-,RPWM+,RPWM- must be kept as short as possible
5. Chassis and circles the whole board on both top and bottom layer.
LN+,LP+,LP-,LN-,RN-,RP-,RP+,RN+, keep as short as possible

POWER SOURCE/AMPLIFIER BOARD SCHEMATIC DIAGRAM

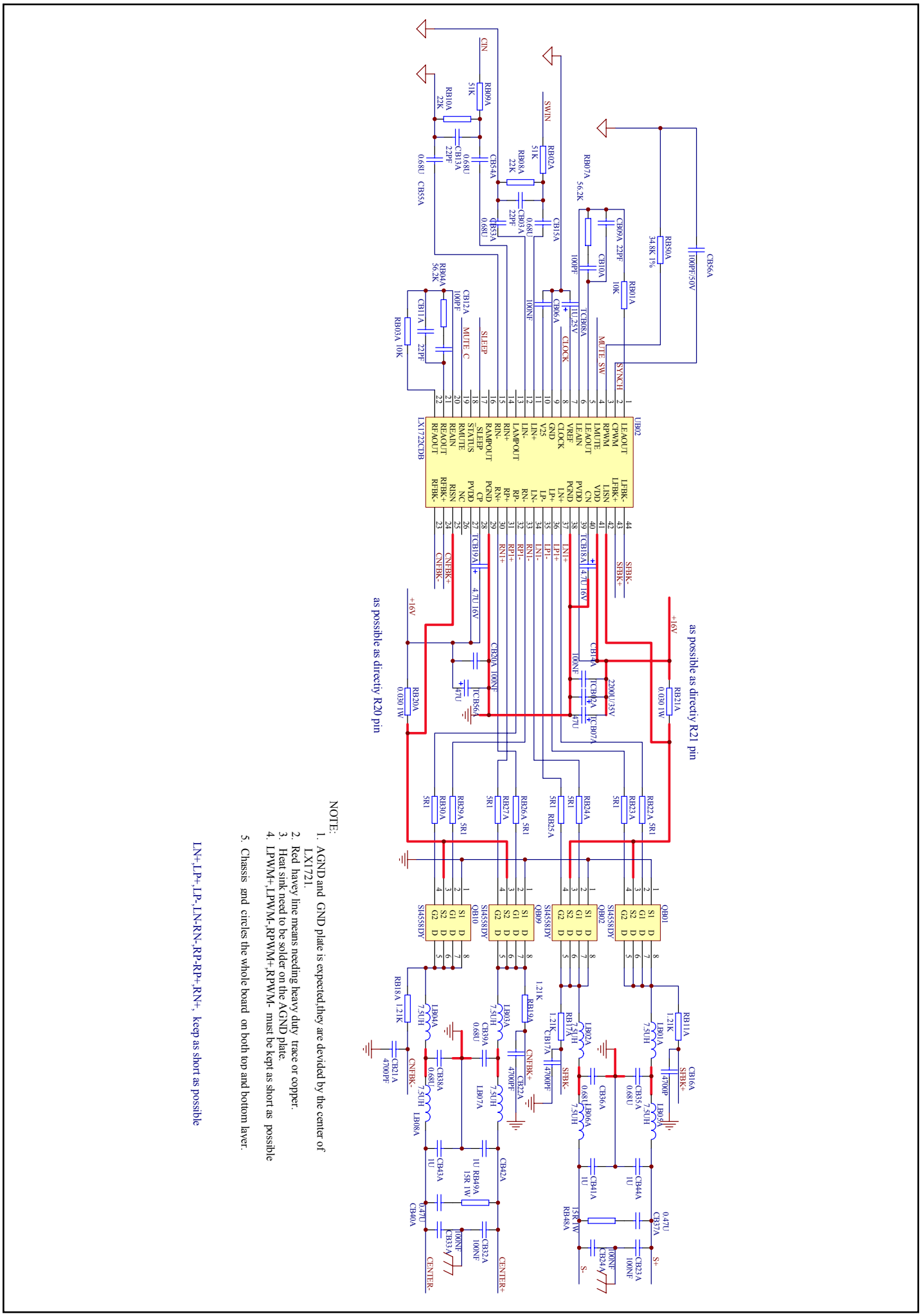

POWER SOURCE/AMPLIFIER BOARD SCHEMATIC DIAGRAM

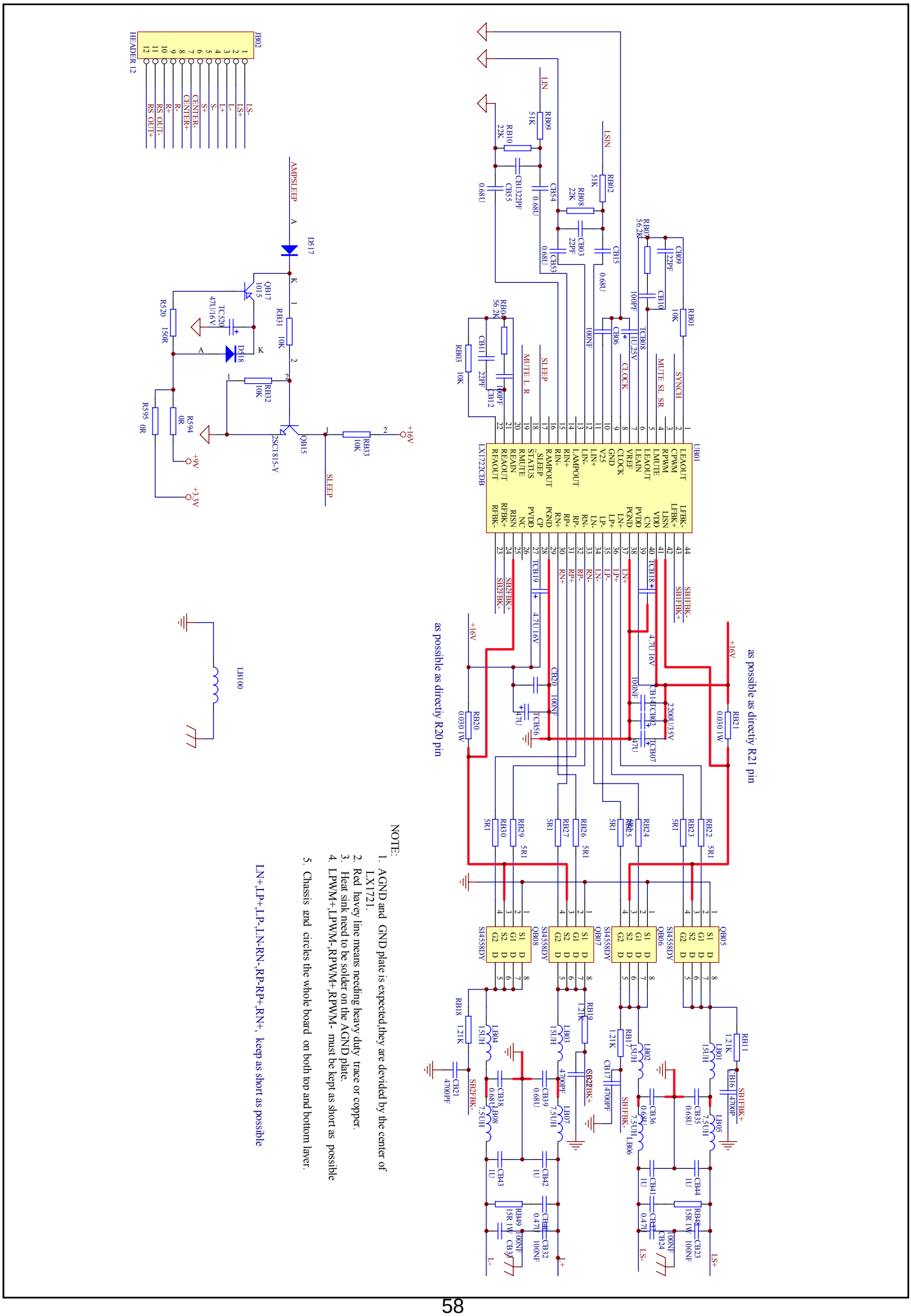

POWER SOURCE/AMPLIFIER BOARD SCHEMATIC DIAGRAM

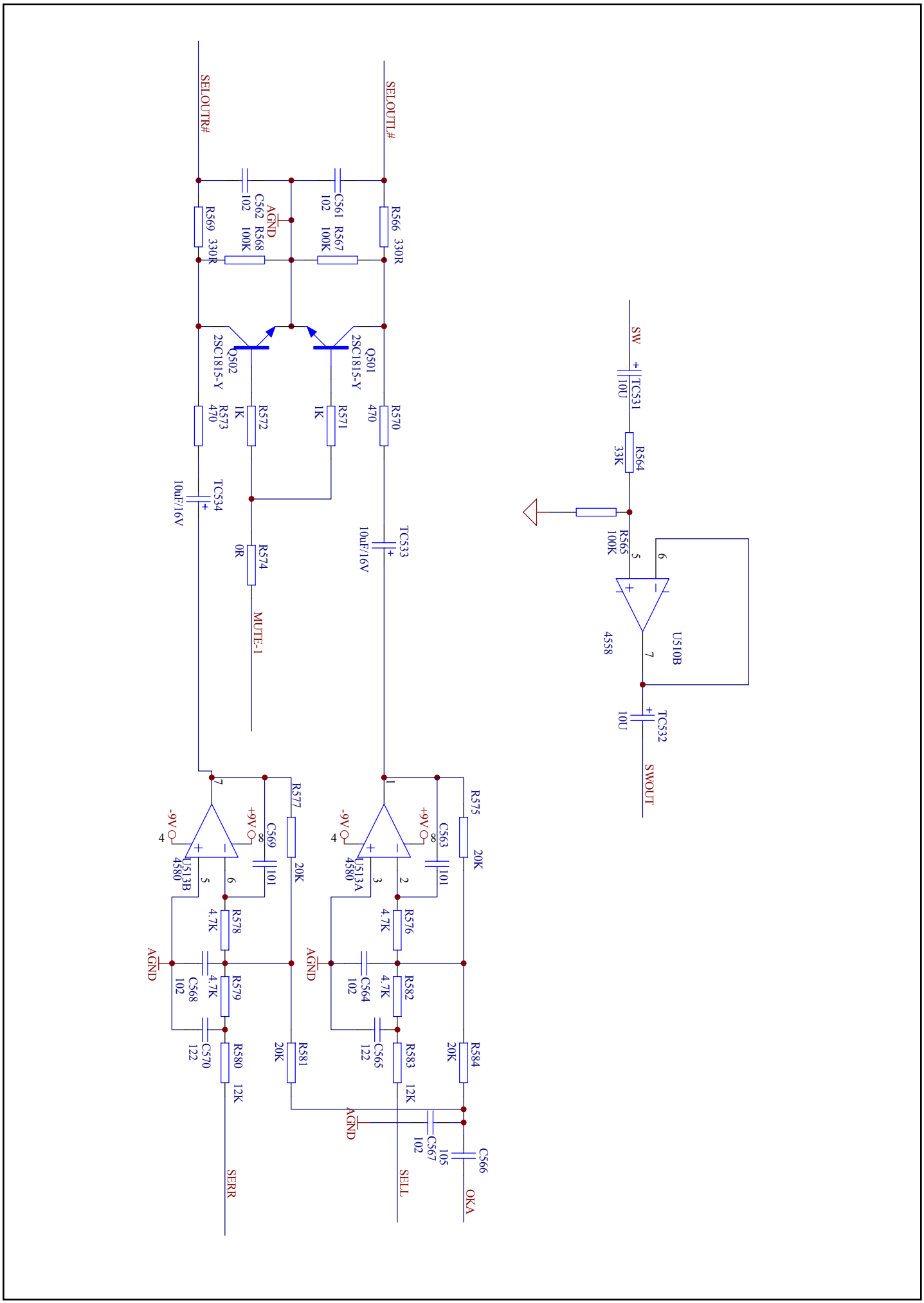

POWER SOURCE/AMPLIFIER BOARD SCHEMATIC DIAGRAM

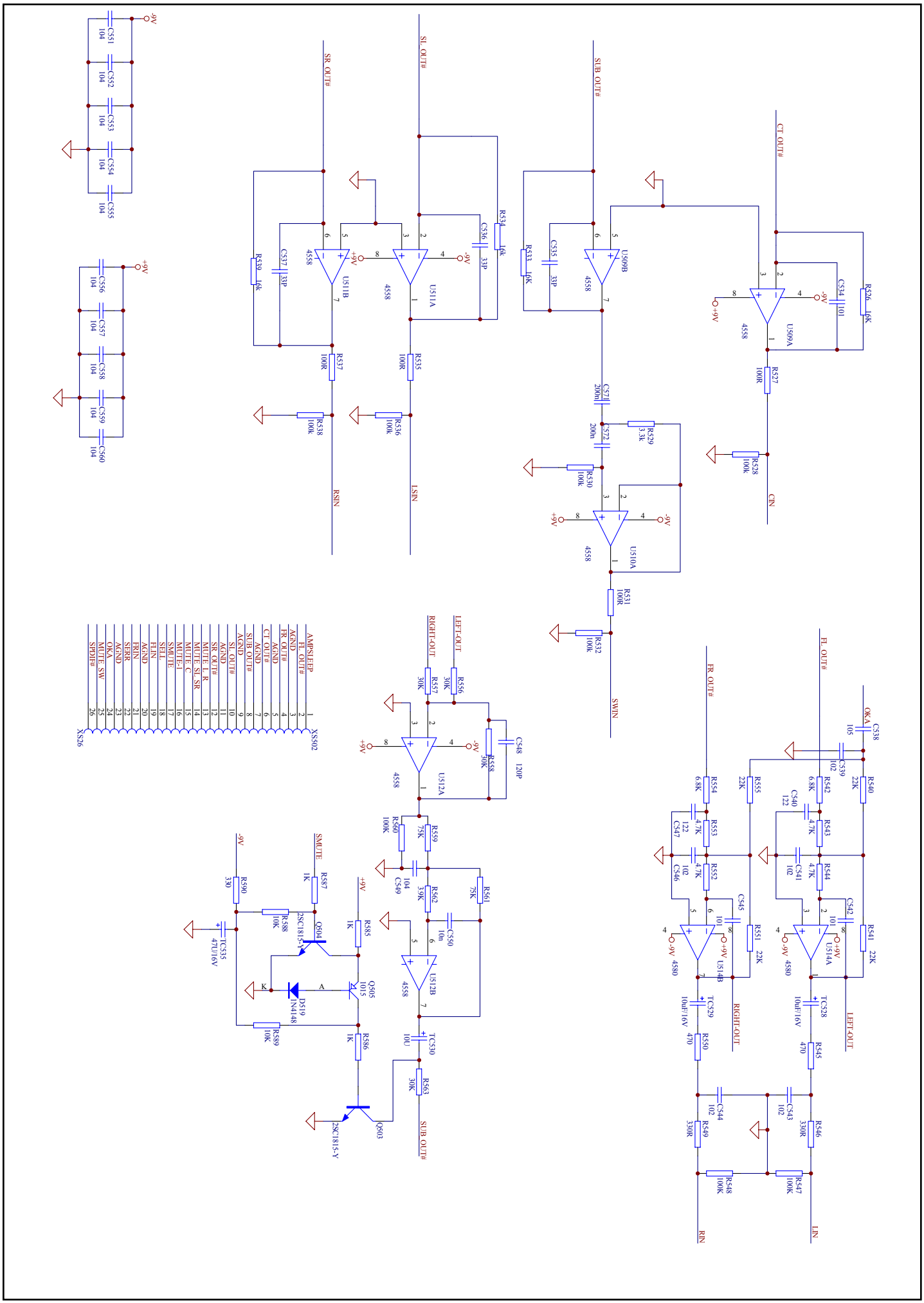

OK SCHEMATIC DIAGRAM

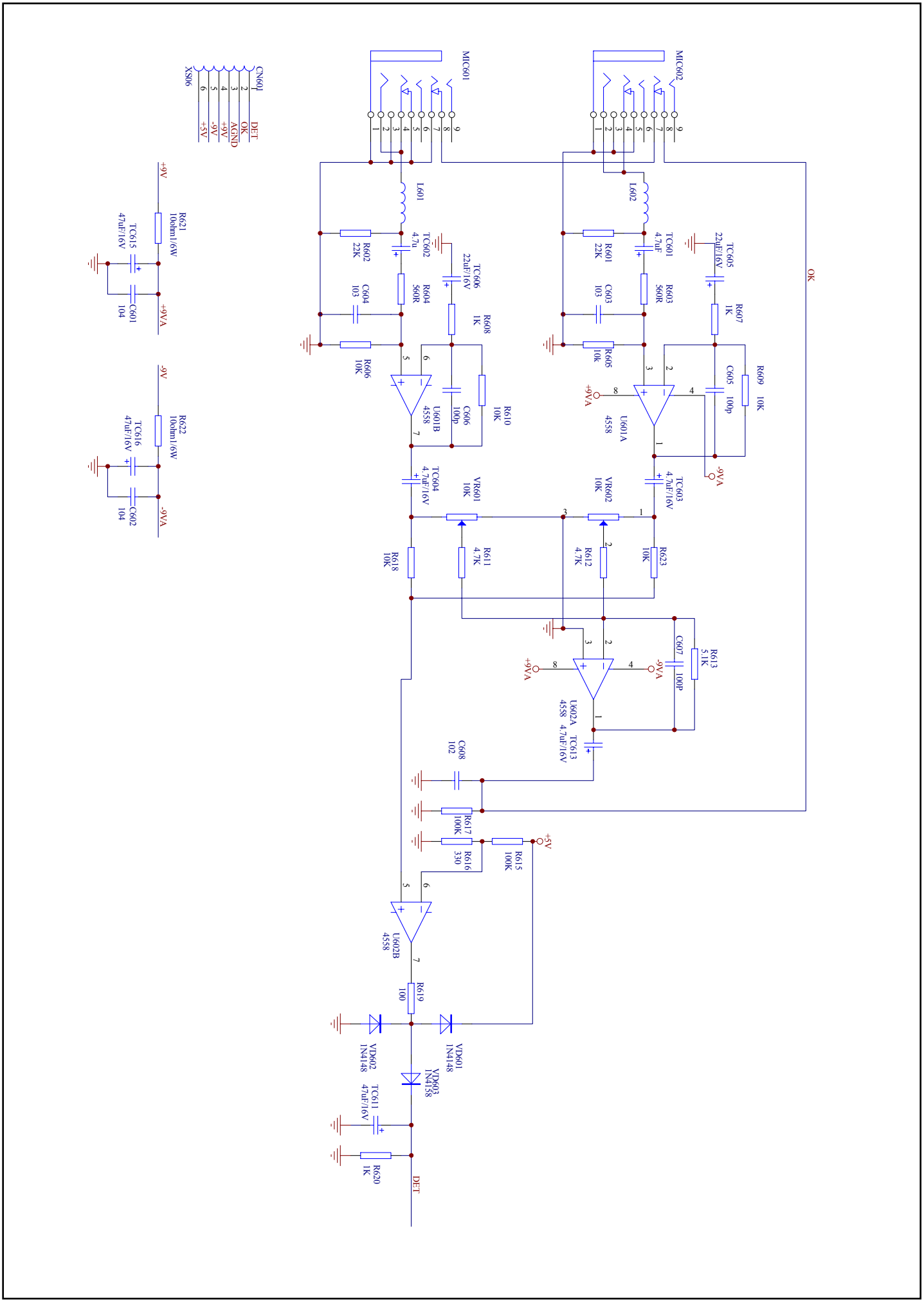

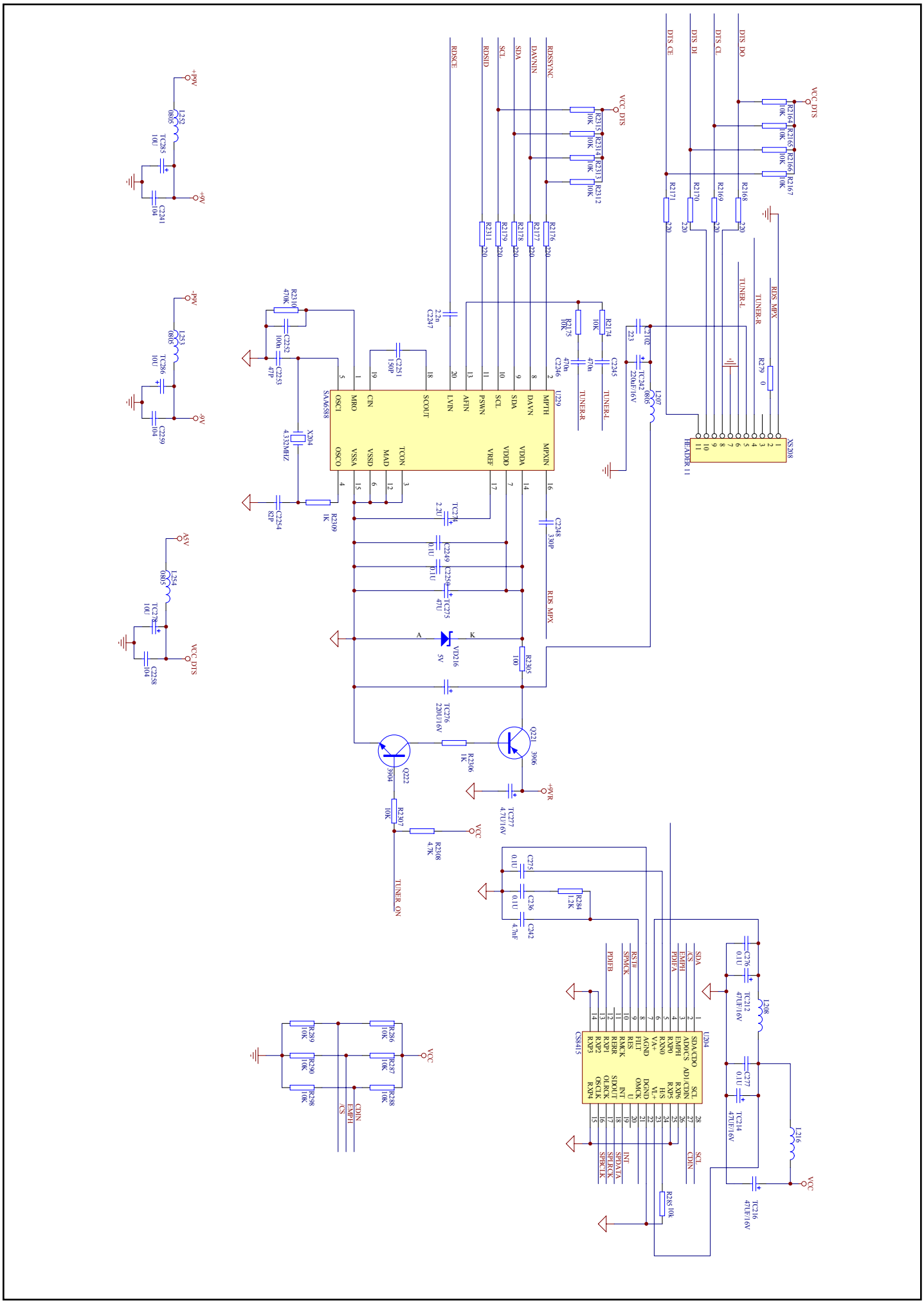
VCC_DTS
DTS_DO
DTS_CL
DTS_DI
DTS_CE
RDS_MPX
TUNER-R
TUNER-L
XS208
HEADER 11
RDSSYNC
DAVNIN
SDA
SCL
RDSID
RDSCE
U229
SA36588
MPTH
DAVN
VDDA
VDDD
VREF
MPXIN
OSCI
MRO
CIN
SCOUT
LVIN
AFIN
PSWN
OSCO
VSSA
VSSD
MAD
TCON
X204
4.332MHZ
VD216
5V
Q221
3906
Q222
3904
+9VR
VCC
TUNER_ON
+9V
-9V
A5V
U204
CS8415
SDA/CDO
ADO/CS
EMPH
RXP0
RXN0
VA+
AGND
FILT
RST
RMCK
RERR
RXP1
RXP2
RXP3
SDOUT
OLRCK
OSCLK
RXP4
RXP5
HS
VL+
DGND
OMCK
INT
SCL
CDIN
SPDIFB
SPDIFA
SPDATA
SPBCK
SPBCLK
CDIN
EMPH
CS

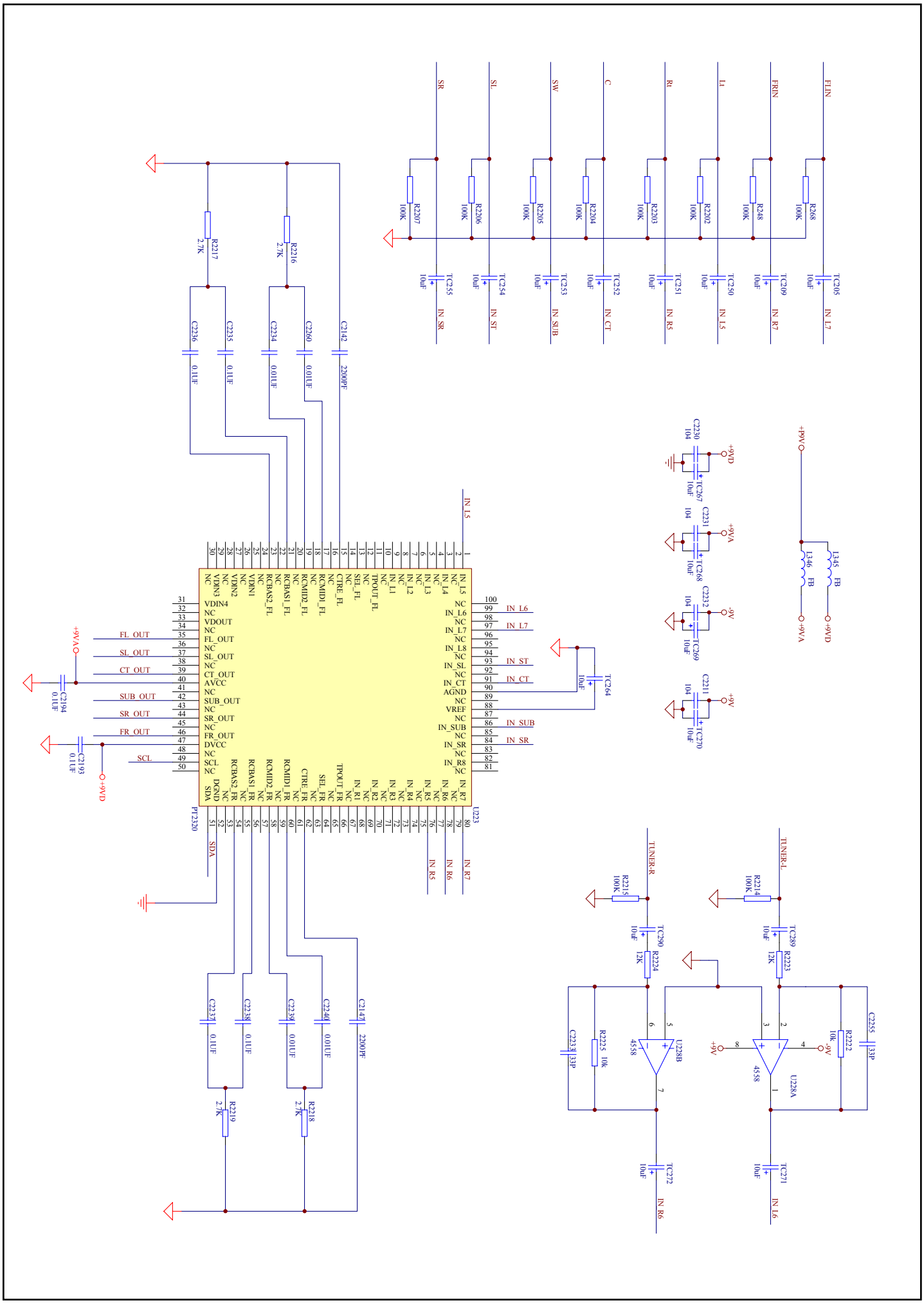
FLIN
FRIN
Lt
Rt
C
SW
SL
SR
R268 100K
R248 100K
R2202 100K
R2203 100K
R2204 100K
R2205 100K
R2206 100K
R2207 100K
TC205 10uF
TC209 10uF
TC250 10uF
TC251 10uF
TC252 10uF
TC253 10uF
TC254 10uF
TC255 10uF
IN_L7
IN_R7
IN_L5
IN_R5
IN_CT
IN_SUB
IN_ST
IN_SR
R2217 2.7K
R2216 2.7K
C2236 0.1UF
C2235 0.1UF
C2234 0.01UF
C2260 0.01UF
C2142 2200PF
+9VD
+9VA
+9V
C2230 104
C2231 104
C2232 104
C2211 104
TC267 10uF
TC268 10uF
TC269 10uF
TC270 10uF
+9V
L346 FB
L345 FB
+9VD
+9VA
IN_L5
IN_L6
IN_L7
IN_ST
IN_CT
IN_SUB
IN_SR
TC264 10uF
FL_OUT
SL_OUT
CT_OUT
SUB_OUT
SR_OUT
FR_OUT
SCL
SDA
+9VA
C2194 0.1UF
C2193 0.1UF
+9VD
PT2320
U223
VDIN4
VDOUT
VDIN3
VDIN2
VDIN1
AVCC
DVCC
DGND
AGND
VREF
RCBAS2_FR
RCBAS1_FR
RCMID2_FR
RCMID1_FR
CTRE_FR
SEL_FR
TPOUT_FR
IN_R1
IN_R2
IN_R3
IN_R4
IN_R5
IN_R6
IN_R7
IN_R5
IN_R6
IN_R7
C2237 0.1UF
C2238 0.1UF
C2239 0.01UF
C2240 0.01UF
C2147 2200PF
R2219 2.7K
R2218 2.7K
TUNER-R
TUNER-L
R2215 100K
R2214 100K
TC290 10uF
TC289 10uF
R2224 12K
R2223 12K
C2233 33P
R2225 10k
U228B
4558
U228A
4558
R2222 10k
C2255 33P
+9V
TC272 10uF
TC271 10uF
IN_R6
IN_L6

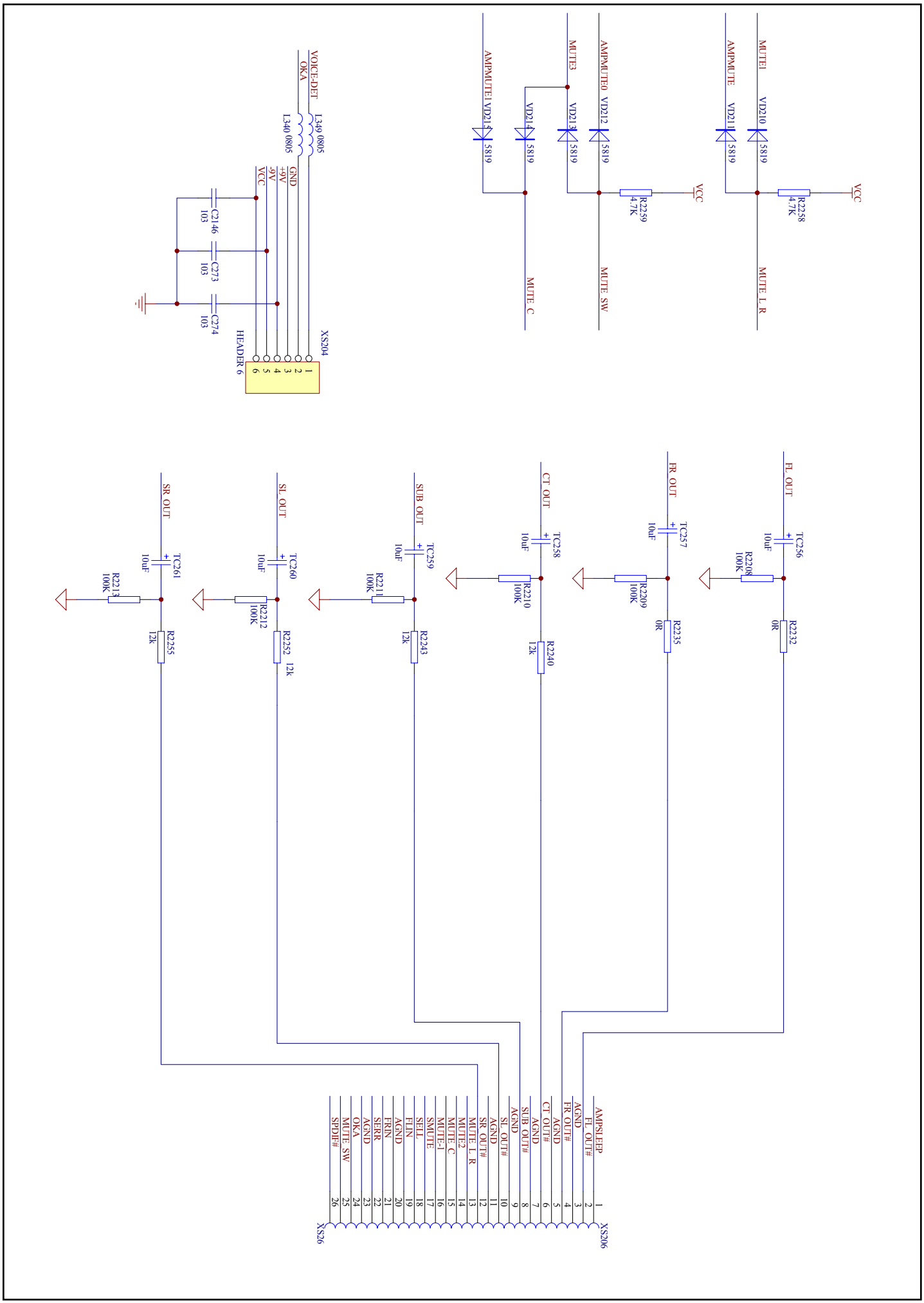
VCC
R2258 4.7K
MUTE1
VD210 5819
MUTE_L_R
AMPMUTE
VD211 5819
VCC
R2259 4.7K
AMPMUTE0
VD212 5819
MUTE_SW
MUTE3
VD213 5819
VD214 5819
MUTE_C
AMPMUTE1
VD215 5819
VOICE-DET
OKA
L349 0805
L340 0805
GND
+9V
-9V
VCC
C2146 103
C273 103
C274 103
HEADER 6
XS204
FL_OUT
TC256 10uF
R2208 100K
R2232 0R
FR_OUT
TC257 10uF
R2209 100K
R2235 0R
CT_OUT
TC258 10uF
R2210 100K
R2240 12k
SUB_OUT
TC259 10uF
R2211 100K
R2243 12k
SL_OUT
TC260 10uF
R2212 100K
R2252 12k
SR_OUT
TC261 10uF
R2213 100K
R2255 12k
AMPSLEEP
FL_OUT#
AGND
FR_OUT#
AGND
CT_OUT#
AGND
SUB_OUT#
AGND
SL_OUT#
AGND
SR_OUT#
MUTE_L_R
MUTE2
MUTE_C
MUTE-1
SMUTE
SELL
FLIN
AGND
FRIN
SERR
AGND
OKA
MUTE_SW
SPDIF#
XS206
XS26

MIAN SCHEMATIC DIAGRAM

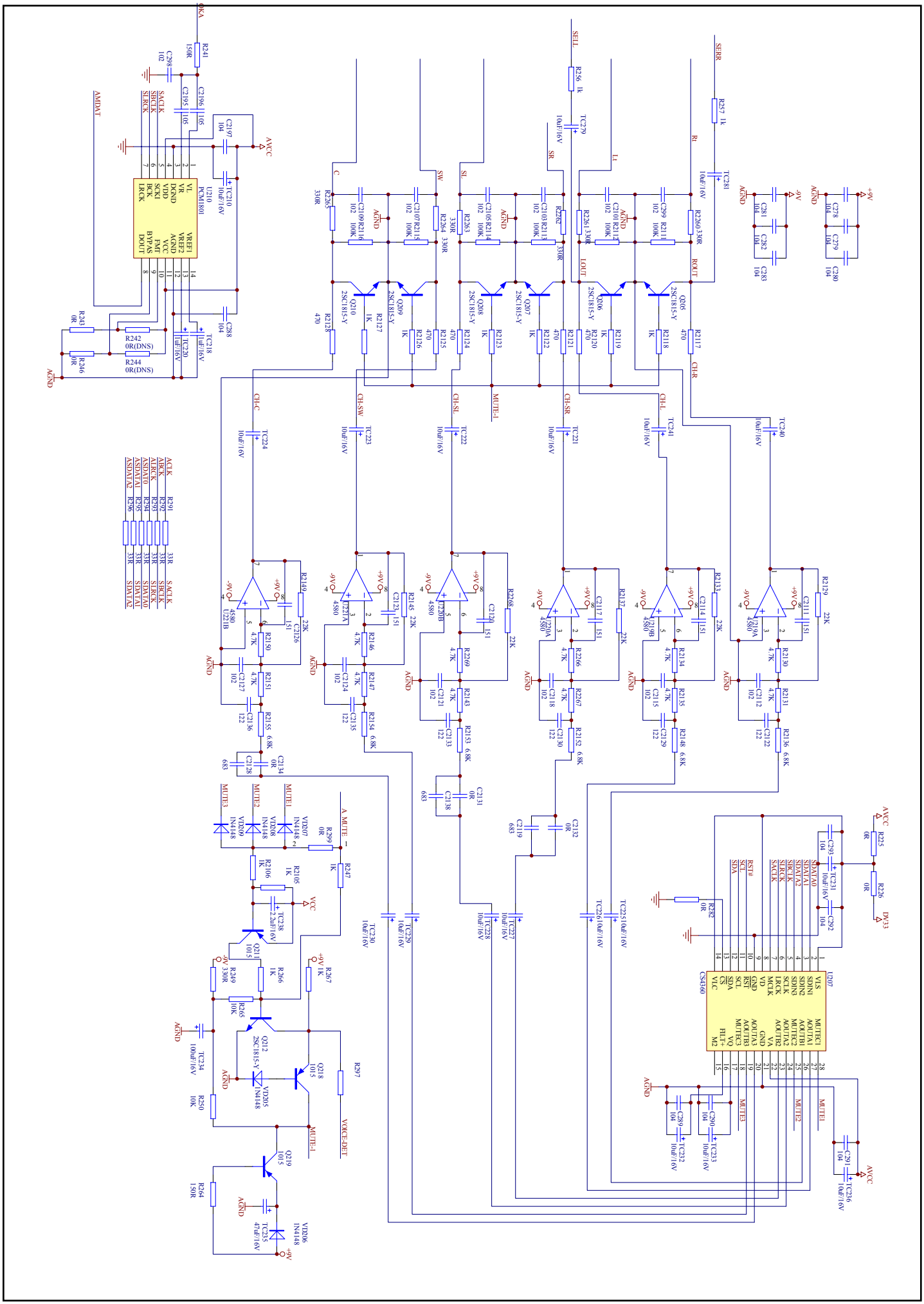

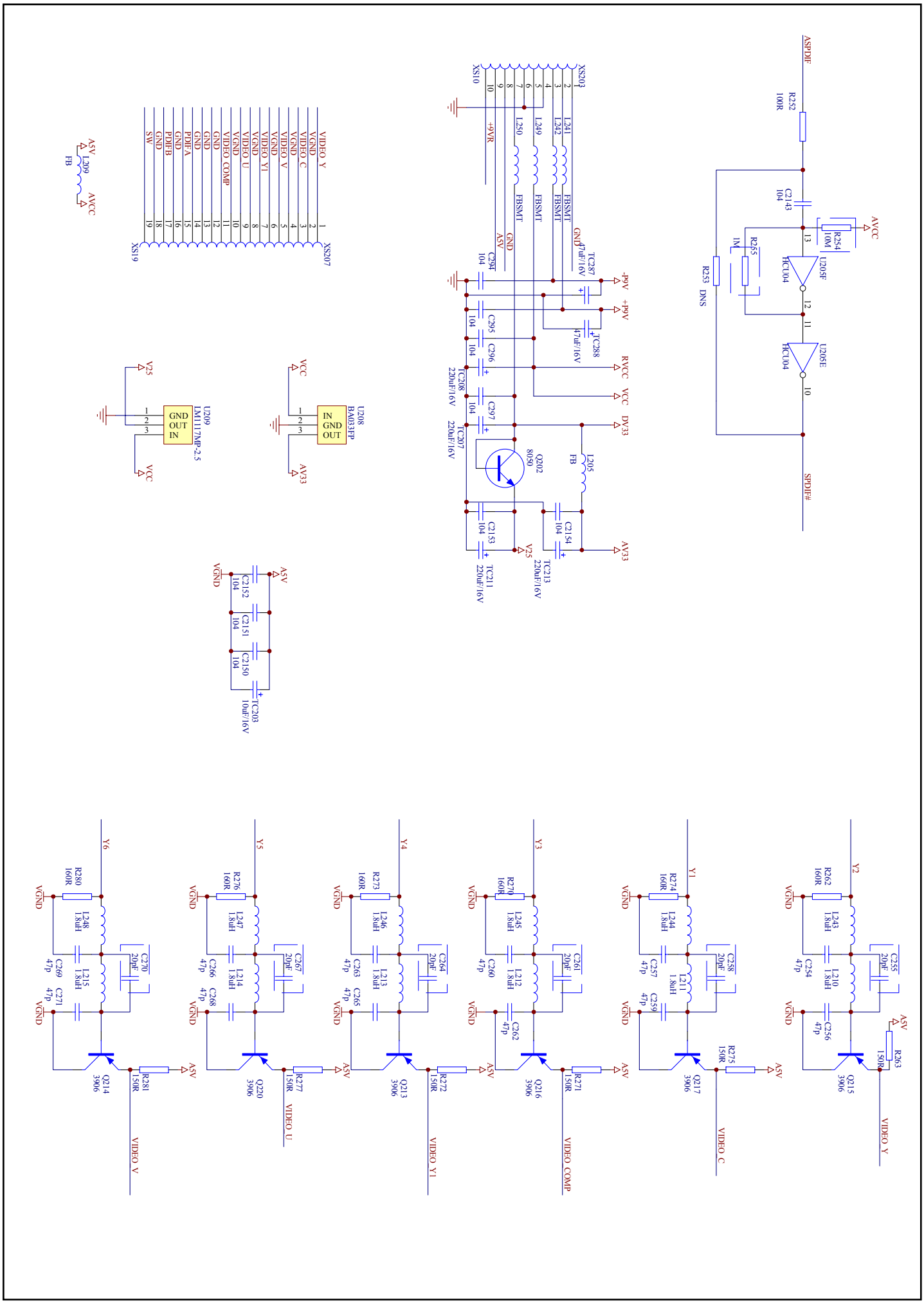
ASPDIF
R252
100R
AVCC
R254
10M
C2143
104
U205F
74CU04
U205E
74CU04
R265
1M
R253
DNS
SPDIF#
XS203
XS10
L241
L242
L249
L250
FBSMT
GND
+9VR
ASV
TC287
47uF/16V
C294
104
-P9V
+P9V
TC288
47uF/16V
C295
104
C296
104
RVCC
VCC
TC208
220uF/16V
C297
104
TC207
220uF/16V
DV33
Q202
8050
L205
FB
C2154
104
C2153
104
TC211
220uF/16V
TC213
220uF/16V
AV33
V25
XS19
XS207
VIDEO Y
VGND
VIDEO C
VIDEO V
VIDEO Y1
VIDEO U
VIDEO COMP
SW
PDIFB
PDIFA
L209
FB
U208
BA033FP
IN
GND
OUT
U209
LM1117MP-2.5
GND
OUT
IN
C2152
104
C2151
104
C2150
104
TC203
10uF/16V
Y2
R262
160R
L243
1.8uH
L210
1.8uH
C255
20pF
C254
47p
C256
47p
Q215
3906
R263
150R
Y1
R274
160R
L244
1.8uH
L211
1.8uH
C258
20pF
C257
47p
C259
47p
Q217
3906
R275
150R
Y3
R270
160R
L245
1.8uH
L212
1.8uH
C261
20pF
C260
47p
C262
47p
Q216
3906
R271
150R
Y4
R273
160R
L246
1.8uH
L213
1.8uH
C264
20pF
C263
47p
C265
47p
Q213
3906
R272
150R
Y5
R276
160R
L247
1.8uH
L214
1.8uH
C267
20pF
C266
47p
C268
47p
Q220
3906
R277
150R
Y6
R280
160R
L248
1.8uH
L215
1.8uH
C270
20pF
C269
47p
C271
47p
Q214
3906
R281
150R