SCHEMATIC DIAGRAM

MODEL : 32WL36P

WARNING: BEFORE SERVICING THIS CHASSIS, READ THE "X-RAY RADIATION PRECAUTION", "SAFETY PRECAUTION" AND "PRODUCT SAFETY NOTICE" ON THE MANUAL FOR THIS MODEL.

CAUTION: The international hazard symbols "⚠" in the schematic diagram and the parts list designate components which have special characteristics important for safety and should be replaced only with types identical to those in the original circuit or specified in the parts list. The mounting position of replacements is to be identical with originals. Before replacing any of these components, read carefully the PRODUCT SAFETY NOTICE on the MANUAL for this model. Do not degrade the safety of the receiver through improper servicing.

NOTE:

1. RESISTOR Resistance is shown in ohm [K = 1.000, M = 1.000.000]. All resistors are 1/6W and 5% tolerance carbon resistor, unless otherwise noted as the following marks.
   1/2R = Metal or Metal oxide of 1/2 watt 1/2S = Carbon compsistion of 1/2 watt
   1RF = Fuse resistor of 1 watt 10W = Cement of 10 watt
   K = ±10% G = ±2% F = ±1%
2. CAPACITOR Unless otherwise noted in schematic, all capacitor values less than 1 are expressed in μF, and the values more than 1 in pF.
   All capacitors are ceramic 50V, unless otherwise noted as the following marks.
   Electolytic capacitor Mylar capacitor
3. The parts indicated with " ⚠ " have special characteristics, and should be replaced with identical parts only.
4. Voltages read with DIGITAL MULTI-METER from point indicated to chassing ground, using a color bar signal with all controls at normal, line voltage 220 volts.
5. Waveforms are taken receiving color bar signal with enough sensitivity.
6. Voltage reading shown are nominal values and may vary ±20% except H.V.

■ SCHEMATIC DIAGRAM STRUCTURE:

- SIGNAL
  - (1/11) [SHEET - 1/11] 1/36
  - AV [SHEET - 2/11] 2/36
  - YPBPRSW [SHEET - 3/11] 3/36
  - MICON / TEXT [SHEET - 4/11] 4/36
  - V / C [SHEET - 5/11] 5/36
  - SIGNAL from AV [SHEET - 6/11] 6/36
  - PC AUDIO SWITCHING [SHEET - 7/11] 7/36
  - HP-AMP&MUTE [SHEET - 8/11] 8/36
  - MON OUTPUT [SHEET - 9/11] 9/36
  - COLOUR DIFFERENCE SWITCHING [SHEET - 10/11] 10/36
  - SYNC_SW [SHEET - 11/11] 11/36
- BACK / AV
  - AV TERMINAL [SHEET - 1/2] 12/36
  - AV from SIGNAL [SHEET - 2/2] 13/36
- SCALER
  - BLOCK DIAGRAM [SHEET - 1/9] 14/36
  - LVDS_IN [SHEET - 2/9] 15/36
  - DIGITAL RGB Pro. [SHEET - 3/9] 16/36
  - SUB MAICON [SHEET - 4/9] 17/36
  - OSD MIX [SHEET - 5/9] 18/36
  - OSD±MIX [SHEET - 6/9] 19/36
  - LVDS OUT [SHEET - 7/9] 20/36
  - (8/9) [SHEET - 8/9] 21/36
  - ANALOG OSD / TEXT [SHEET - 9/9] 22/36
- M2 / TEXT
  - (1/2) [SHEET - 1/2] 23/36
  - (2/2) [SHEET - 2/2] 24/36
- TIF-MA
  - TIF & MA [SHEET - 1/2] 25/36
  - AUDIO GAIN COMPENSATION [SHEET - 2/2] 26/36
- FRONT AV 27/36
- KEY 28/36
- LED RMT 29/36
- PC INPUT 30/36
- POWER SW 31/36
- 3D YCS 32/36
- G-HYPER 33/36
- A-OUT
  - (1/2) [SHEET - 1/2] 34/36
  - (2/2) [SHEET - 2/2] 35/36
- WIRING CONNECTION DIAGRAM 36/36

CIRCUIT BLOCK DIAGRAM

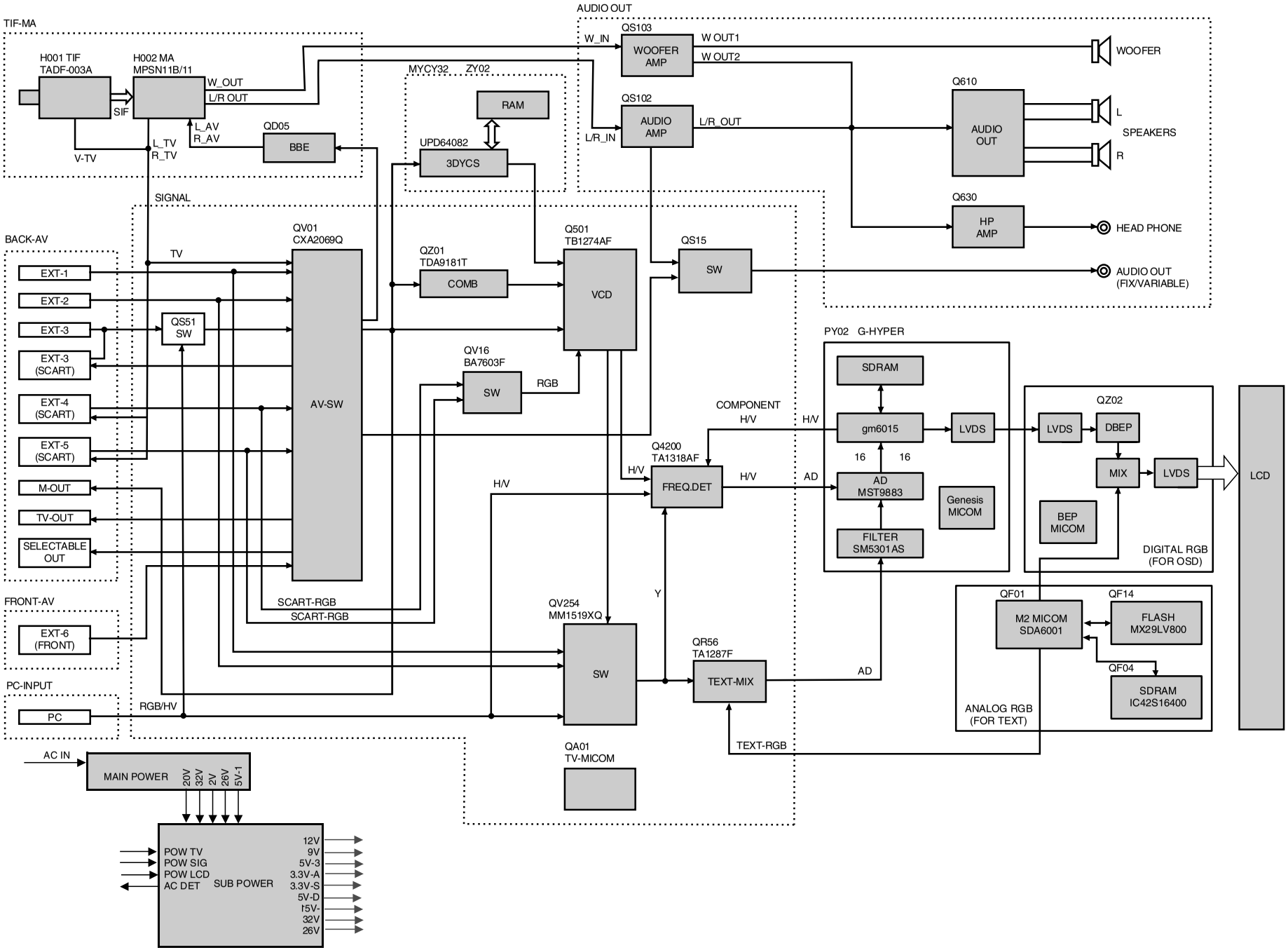

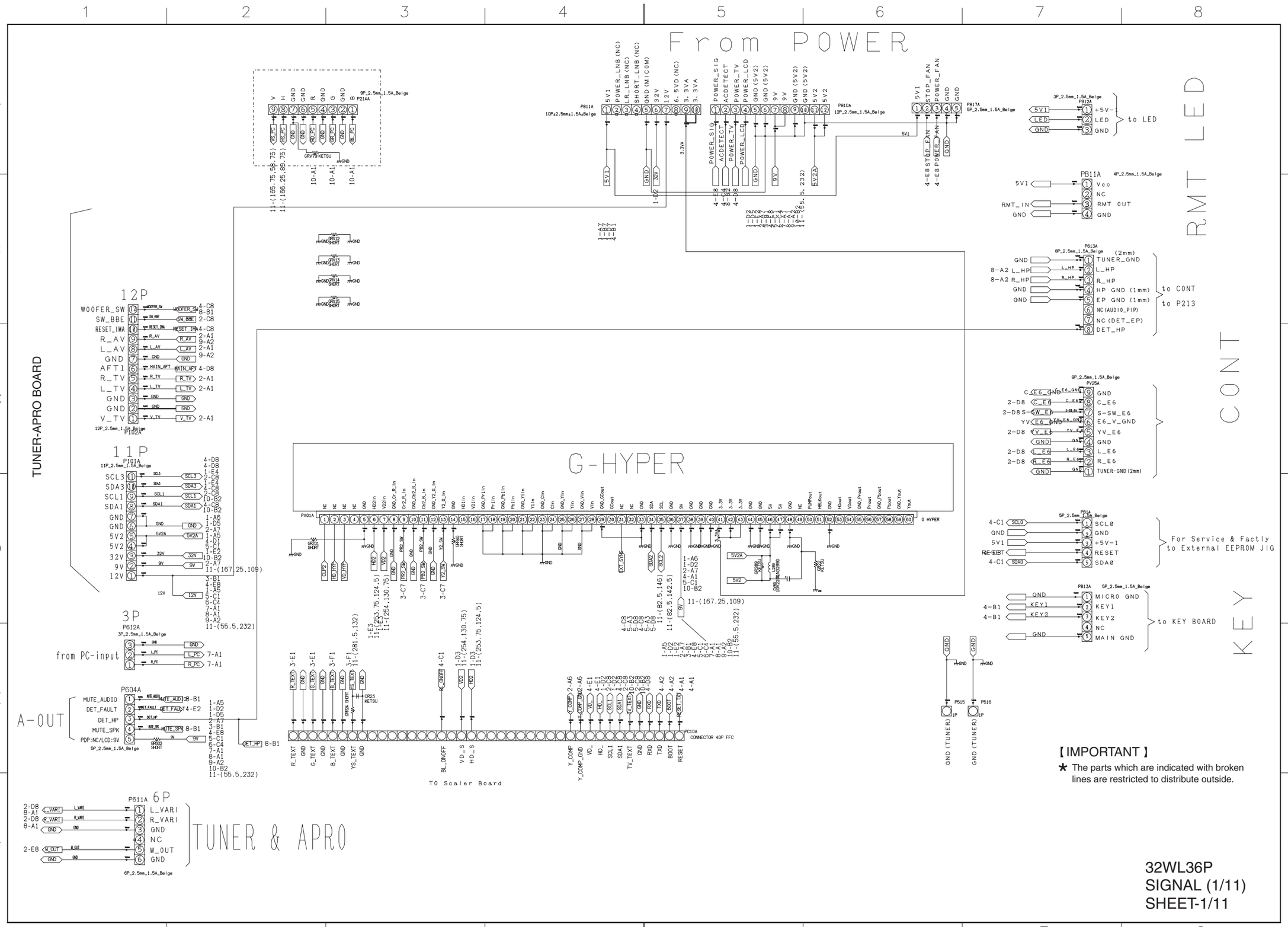
From POWER
RMT LED
CONT
KEY
TUNER-APRO BOARD
G-HYPER
T0 Scaler Board
A-OUT
TUNER & APRO
12P
11P
3P
from PC-input
to LED
to CONT
to P213
For Service & Factly
to External EEPROM JIG
to KEY BOARD
【IMPORTANT】
★ The parts which are indicated with broken lines are restricted to distribute outside.
32WL36P
SIGNAL (1/11)
SHEET-1/11

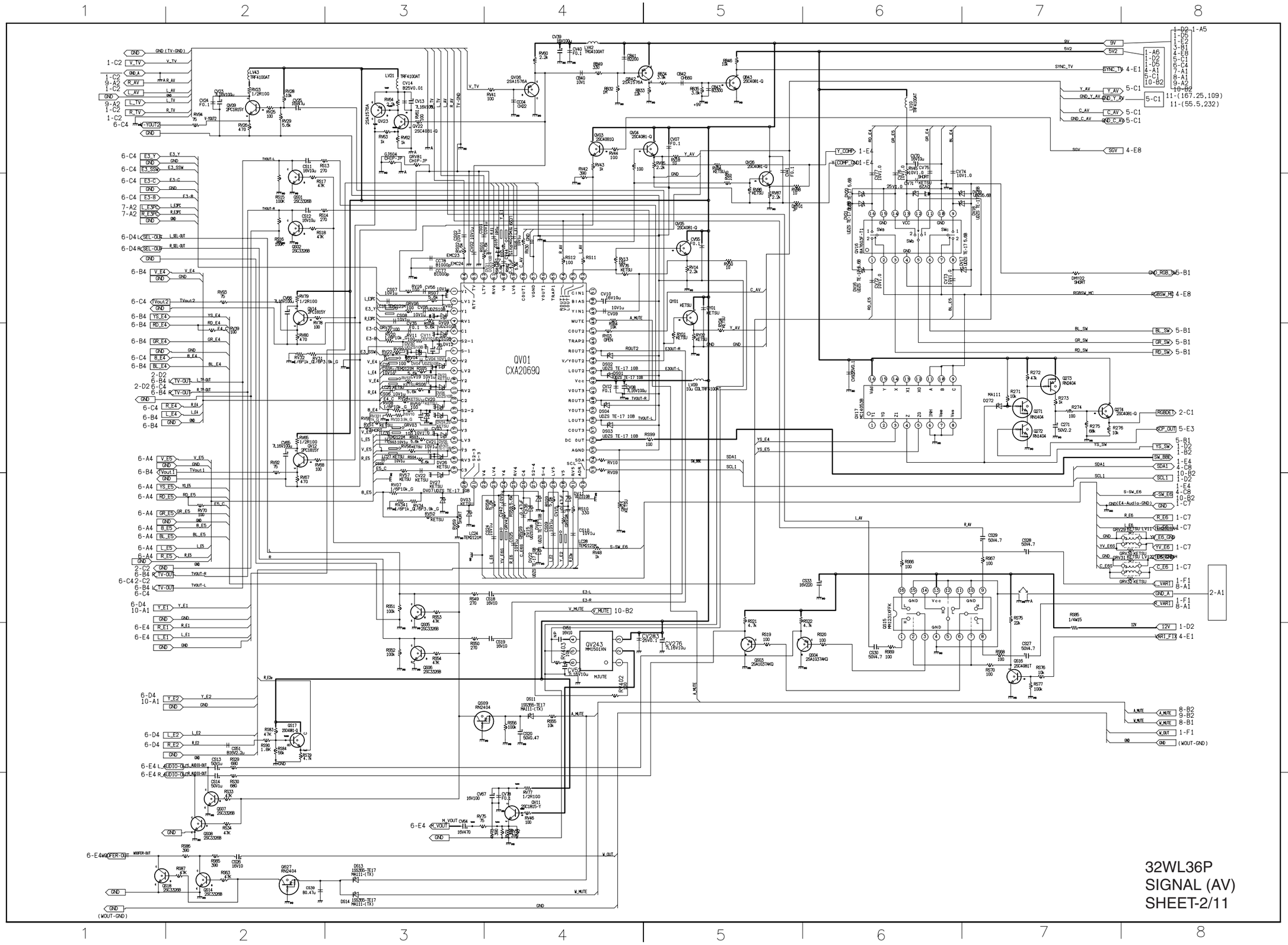
QV01
CXA2069Q
32WL36P
SIGNAL (AV)
SHEET-2/11

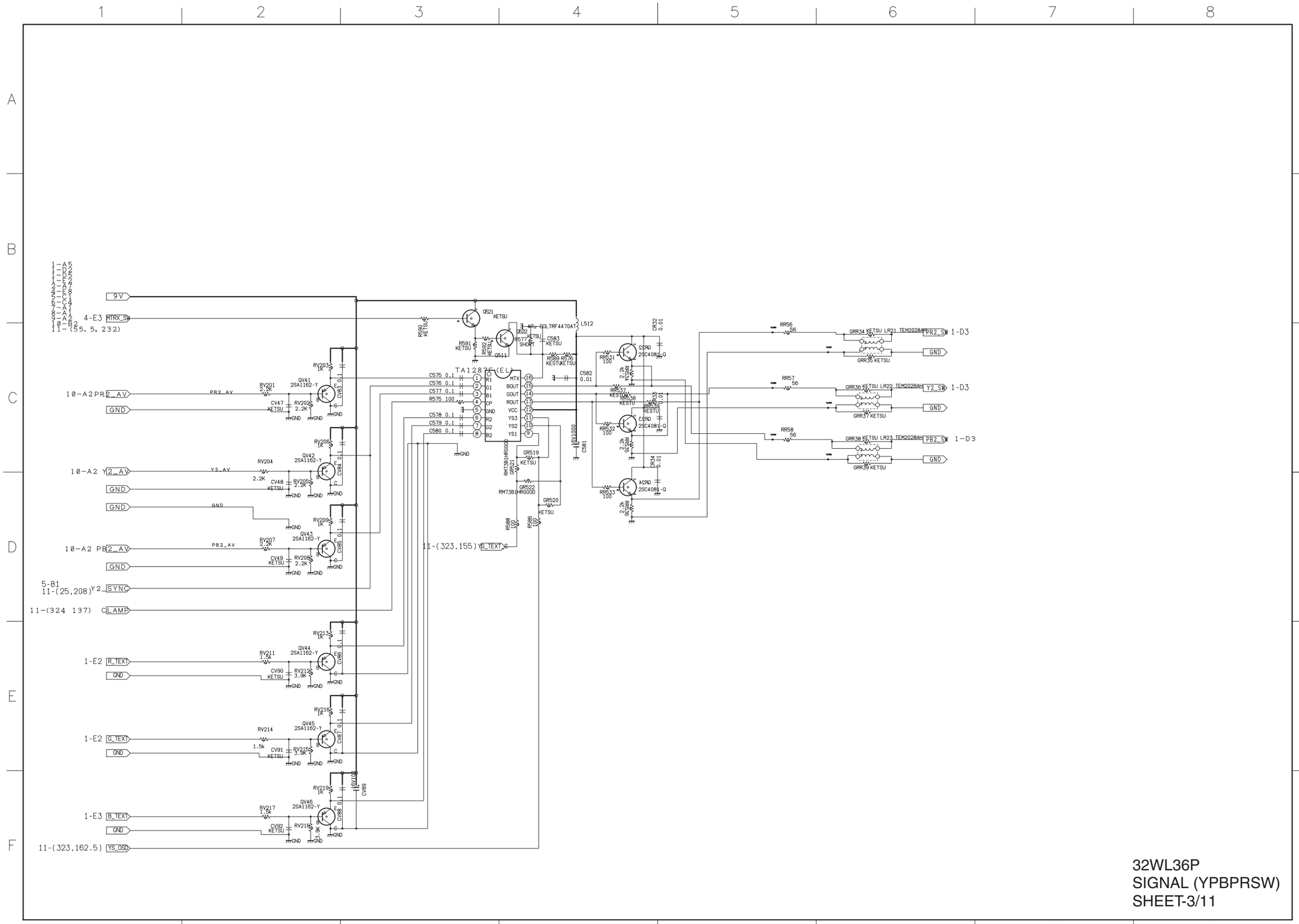

32WL36P
SIGNAL (YPBPRSW)
SHEET-3/11

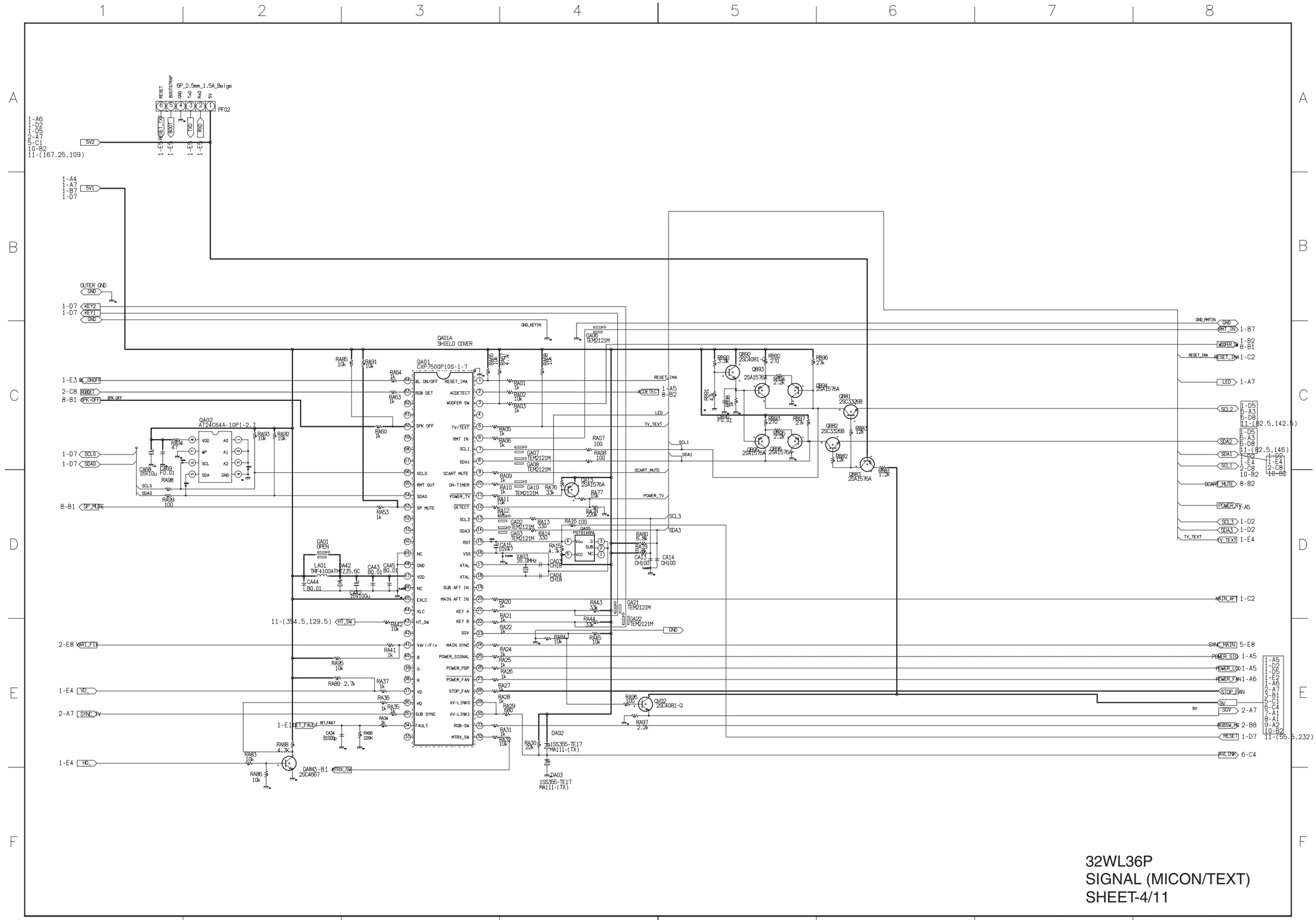
32WL36P
SIGNAL (MICON/TEXT)
SHEET-4/11

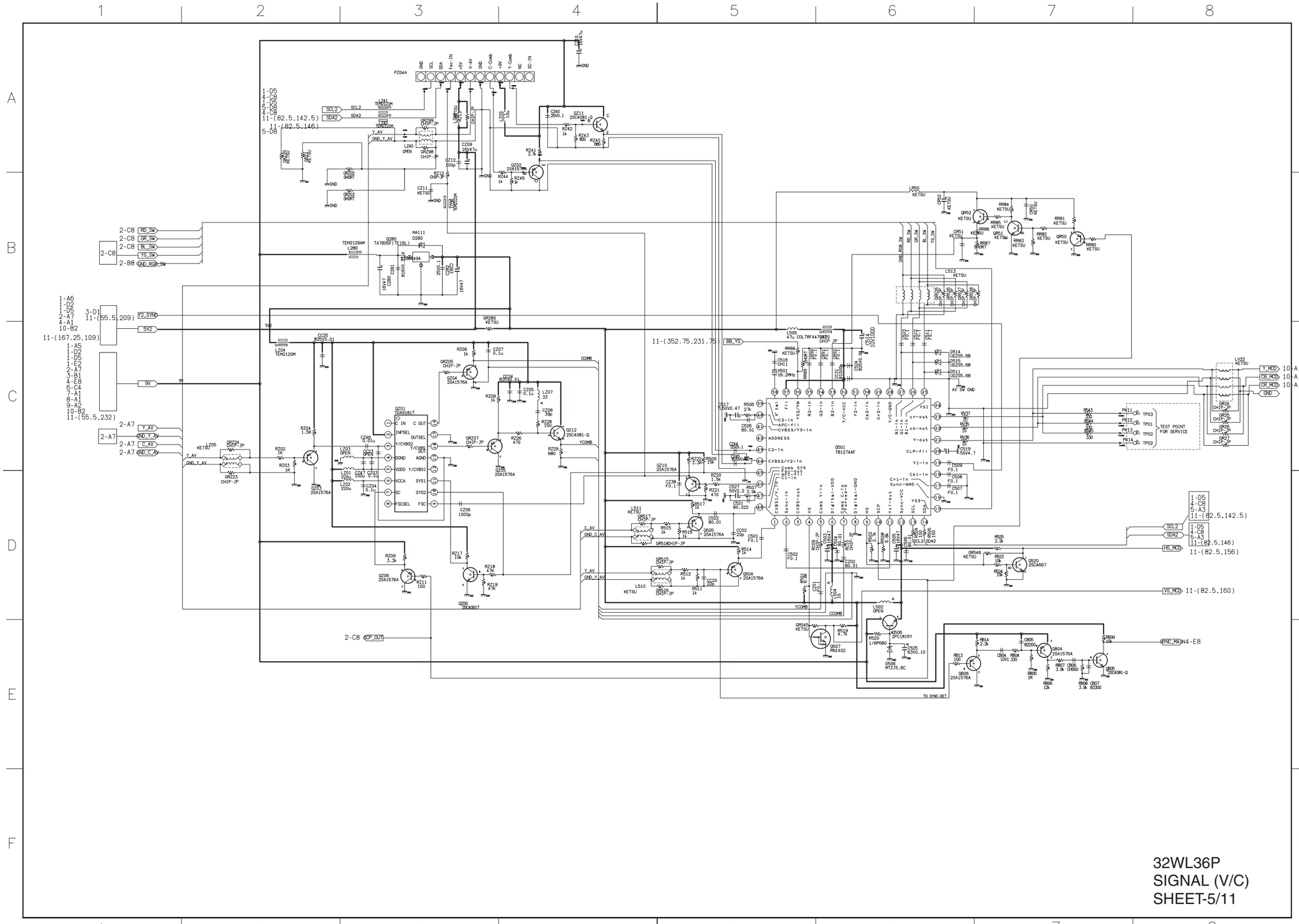

32WL36P
SIGNAL (V/C)
SHEET-5/11

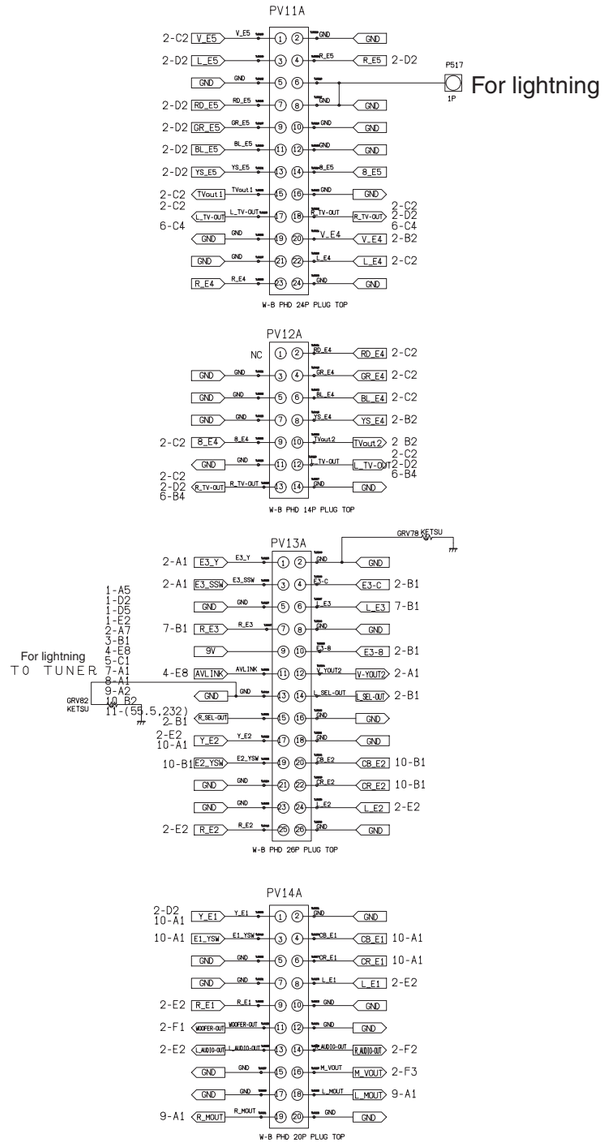

32WL36P
SIGNAL (SIGNAL from AV)
SHEET-6/11

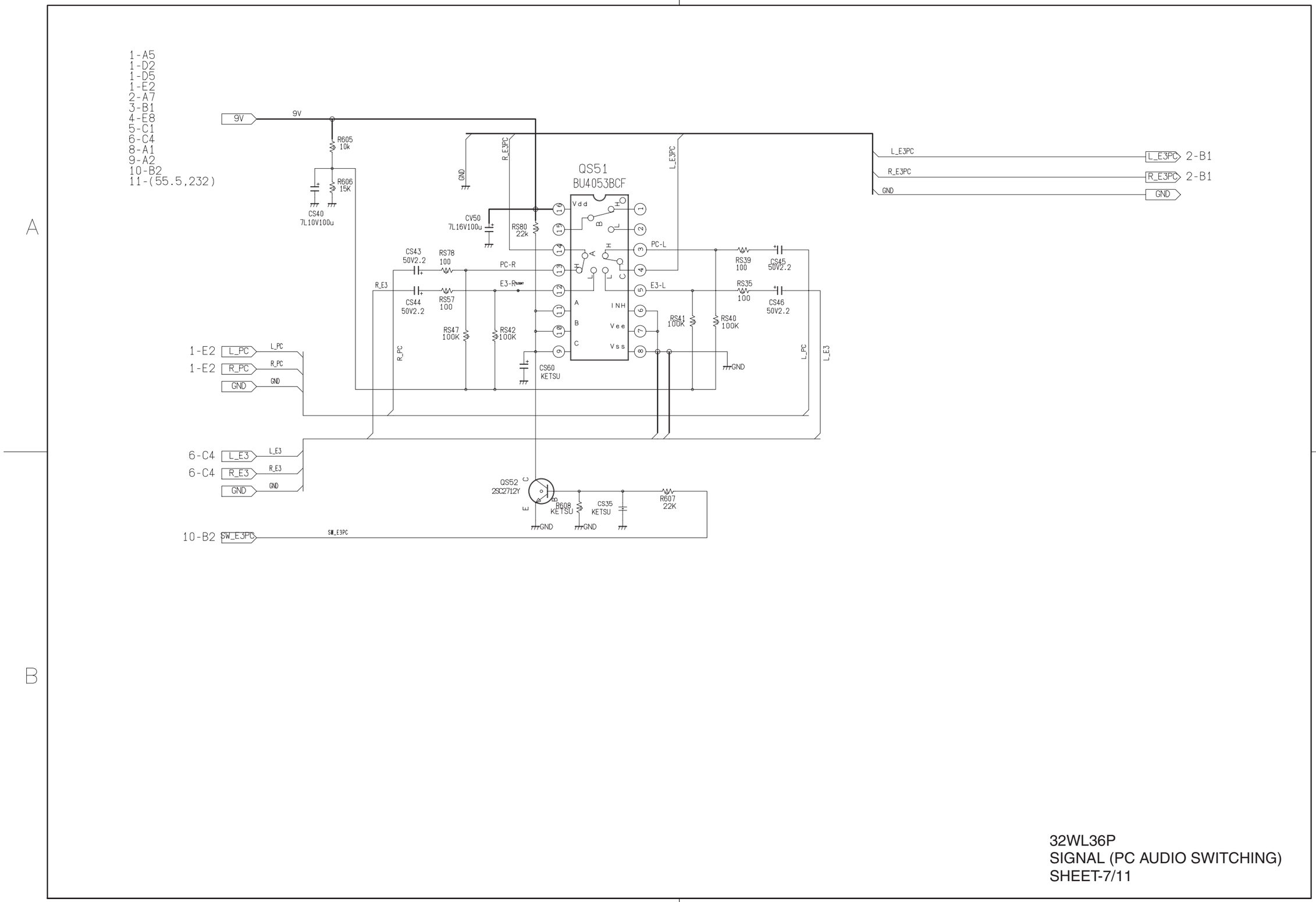

32WL36P
SIGNAL (PC AUDIO SWITCHING)
SHEET-7/11

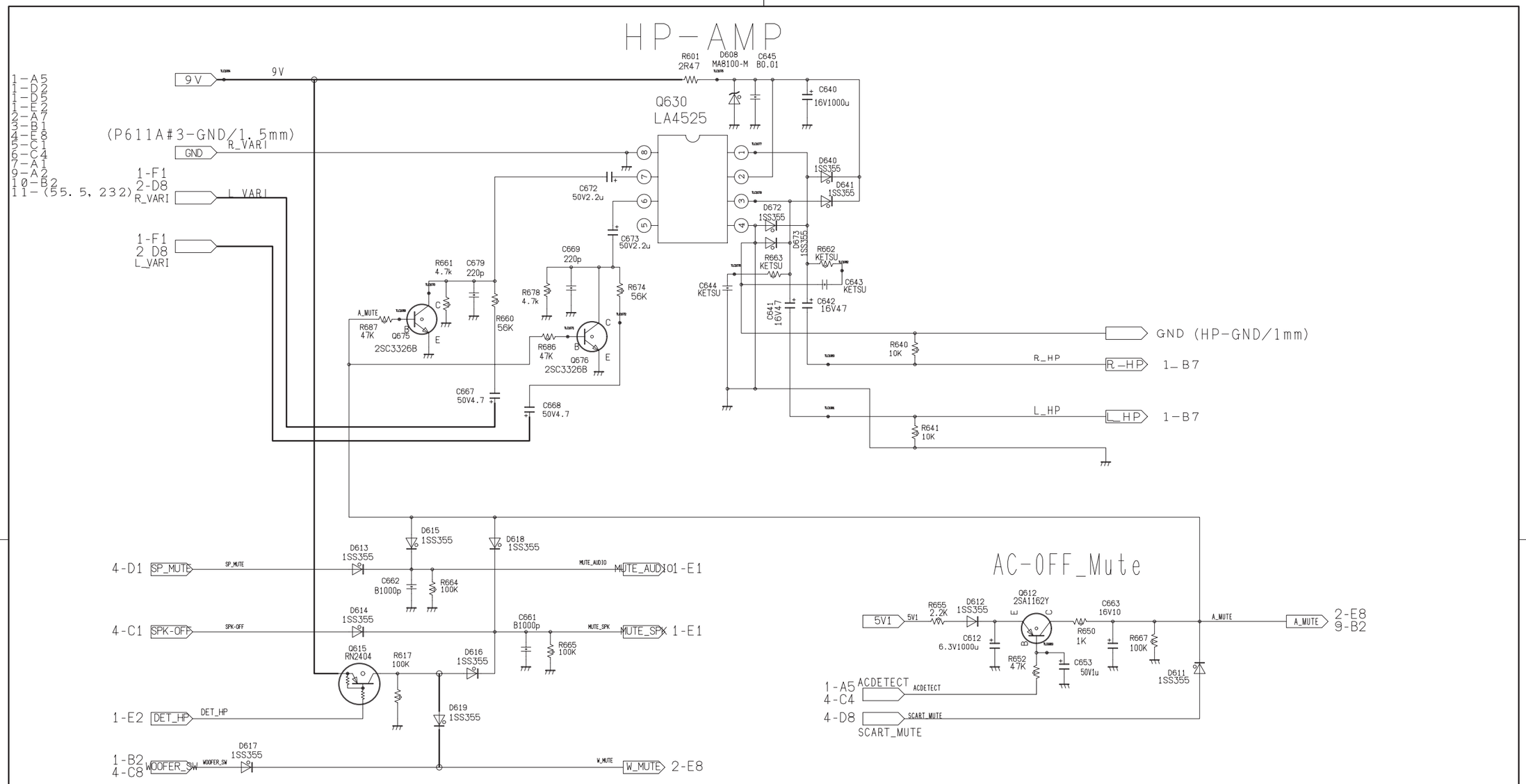

32WL36P
SIGNAL (HP-AMP&MUTE)
SHEET-8/11

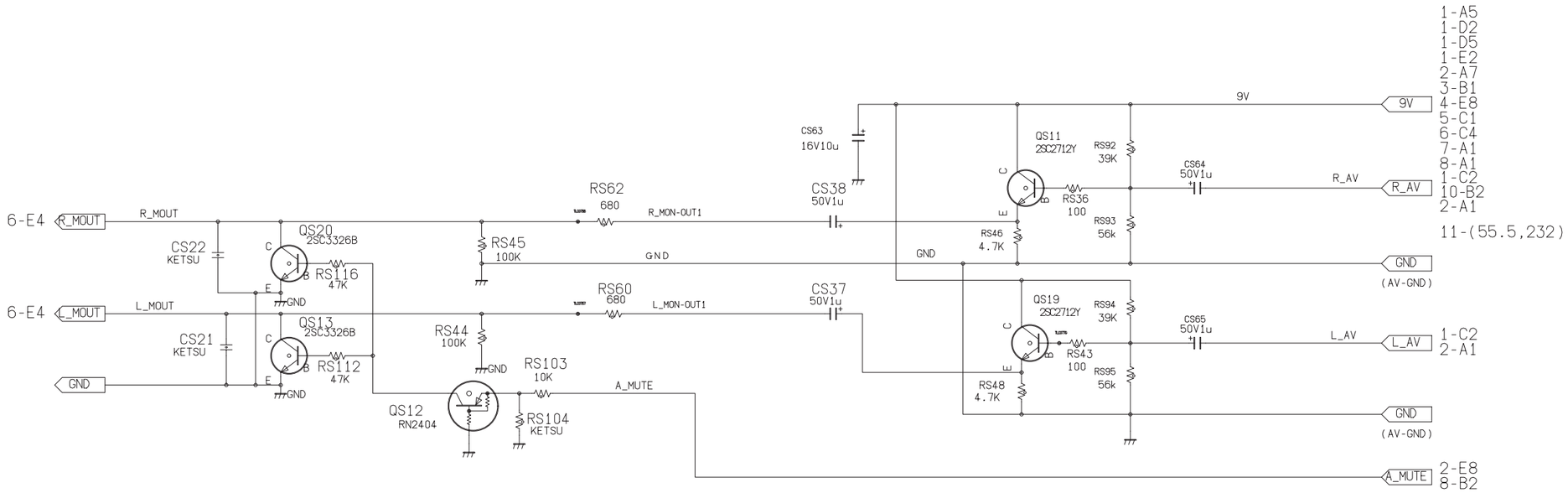

32WL36P
SIGNAL (MON OUTPUT)
SHEET-9/11

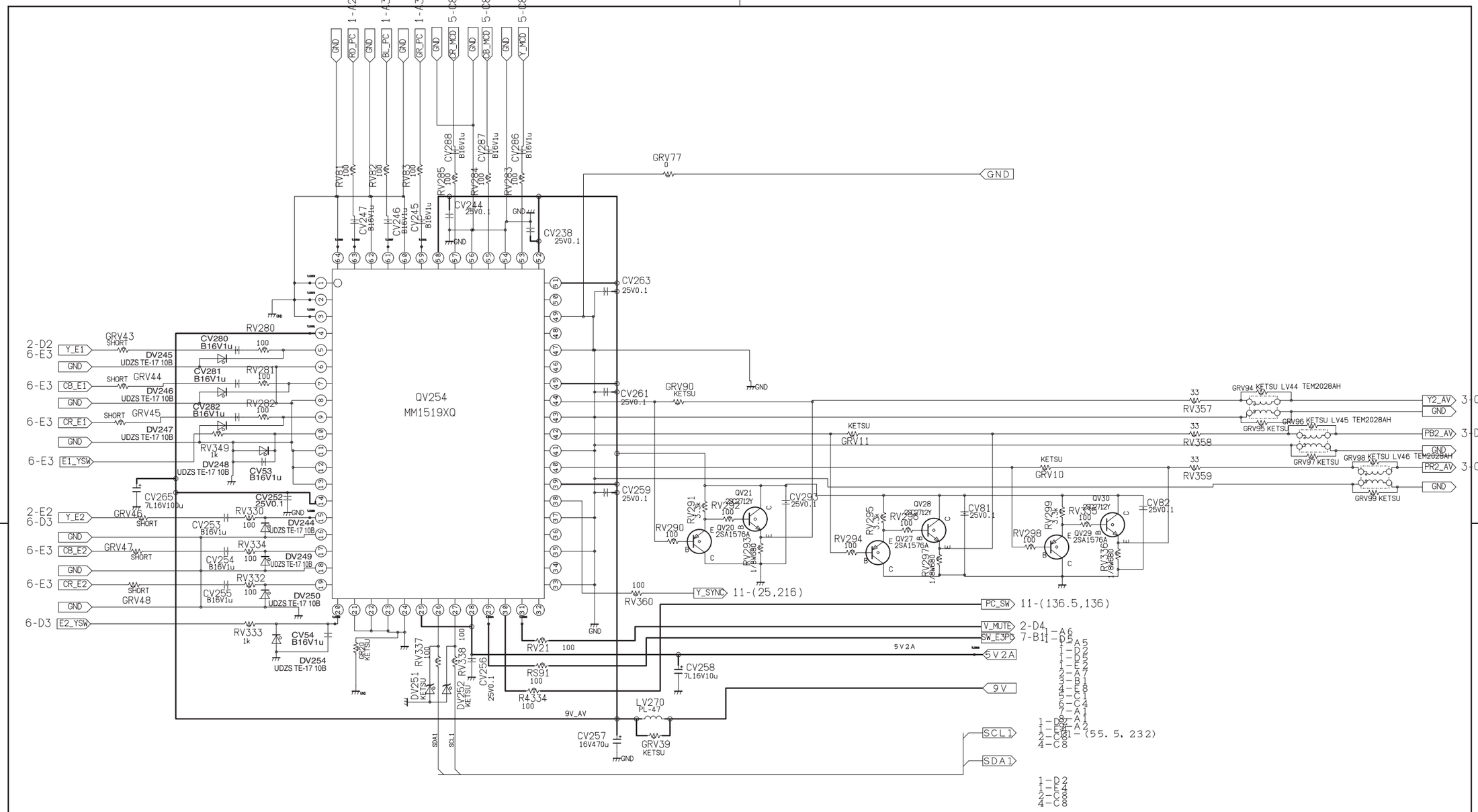

32WL36P
SIGNAL (COLOUR DIFFERENCE SWITCHING)
SHEET-10/11

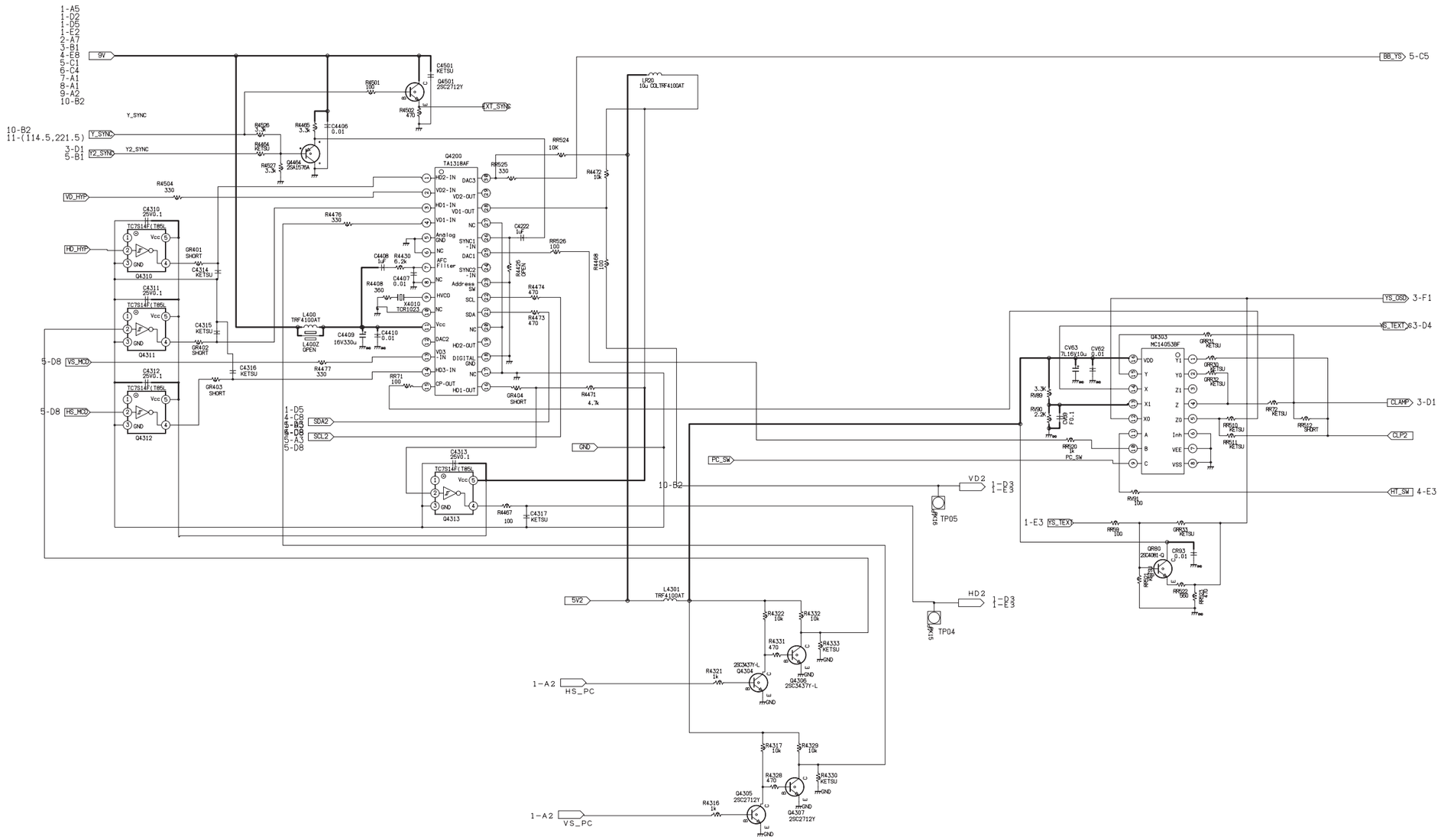

32WL36P
SIGNAL (SYNC_SW)
SHEET-11/11

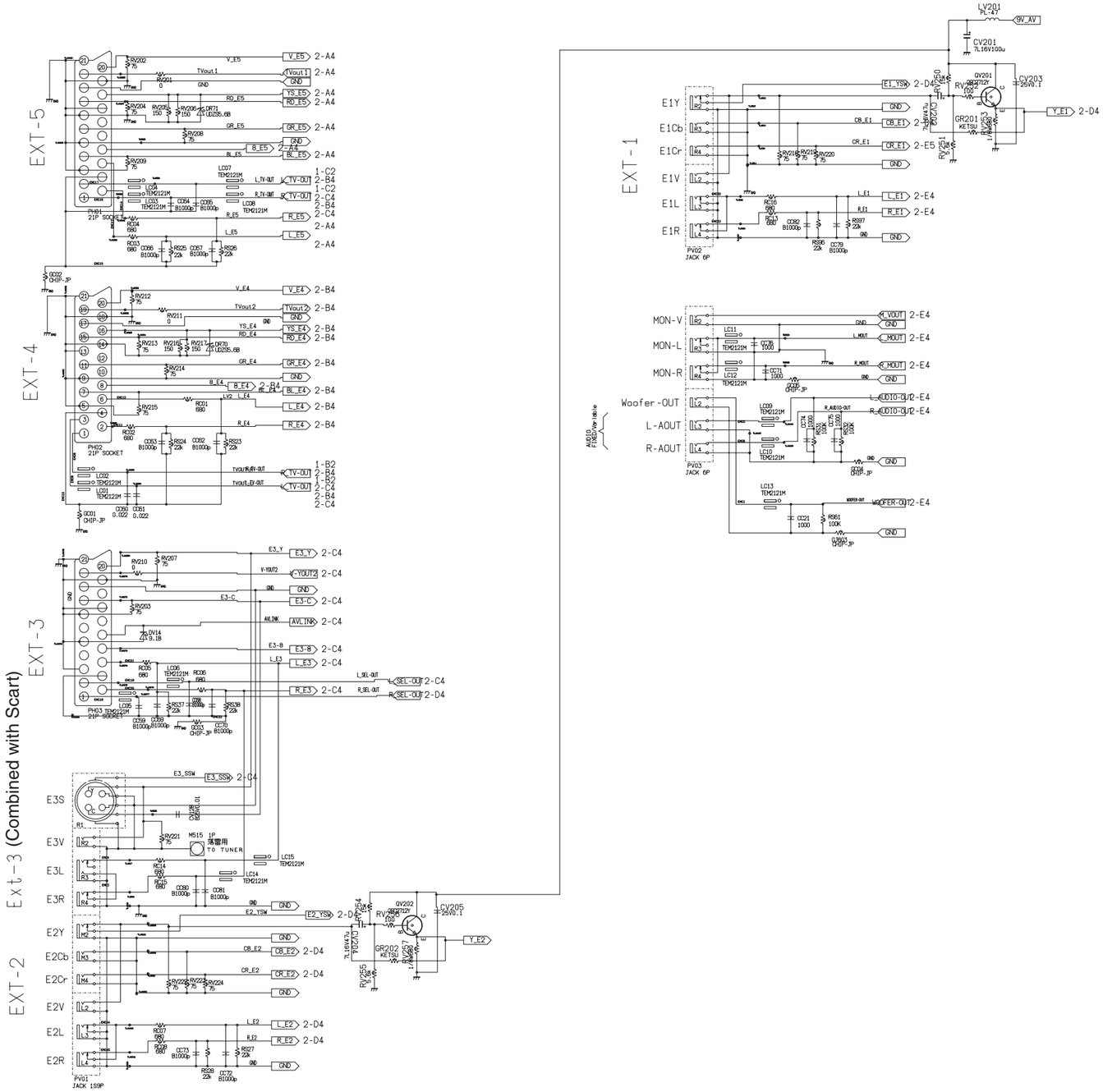

32WL36P
BACK/AV (AV TERMINAL)
SHEET-1/2

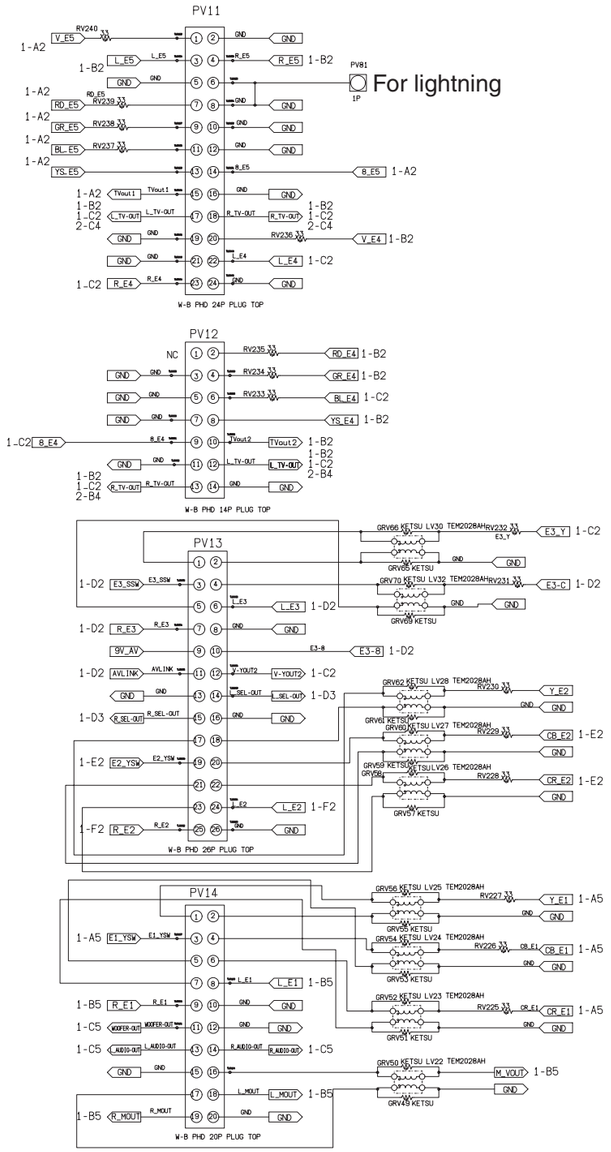

32WL36P
BACK/AV (AV from SIGNAL)
SHEET-2/2

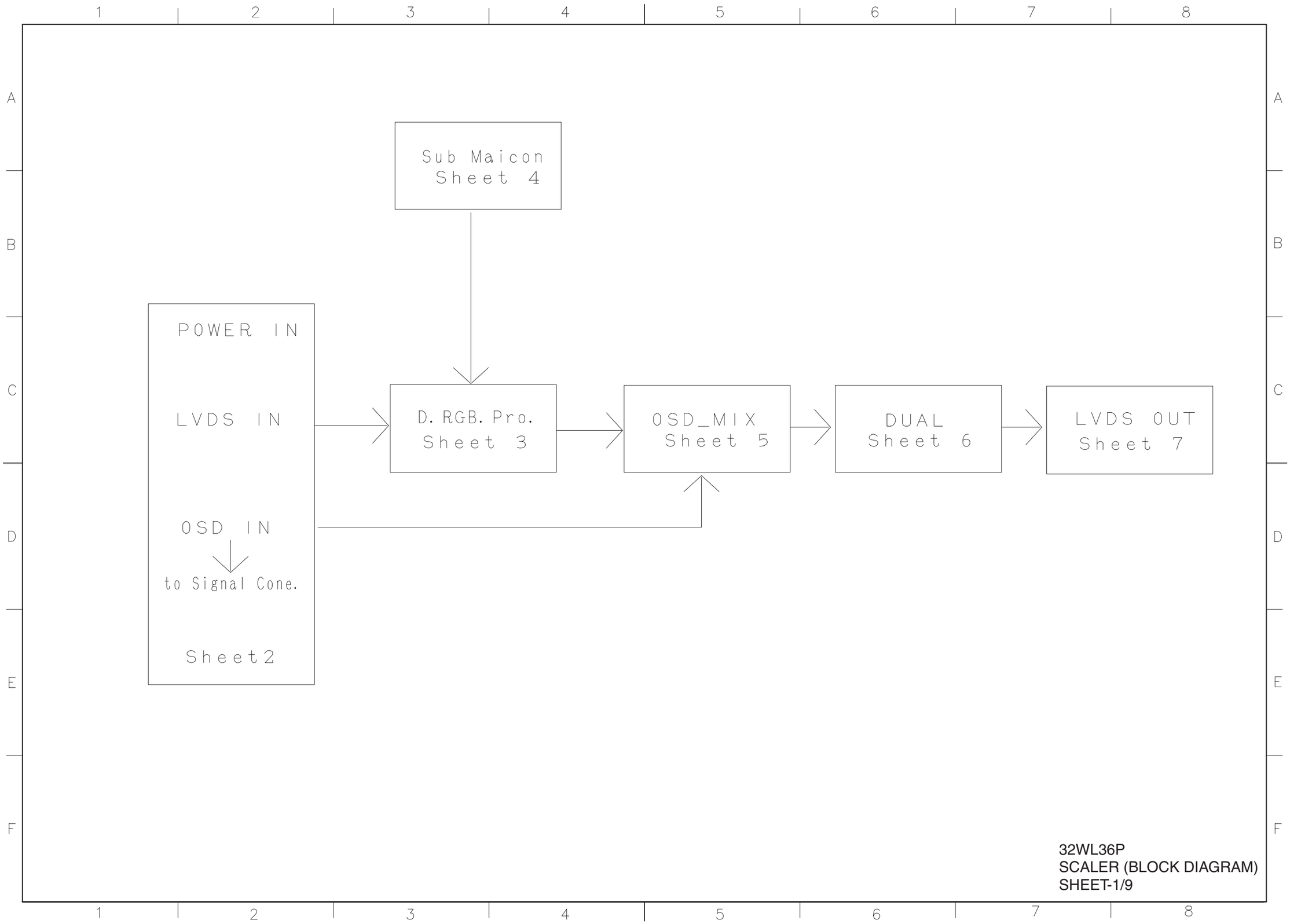

32WL36P
SCALER (BLOCK DIAGRAM)
SHEET-1/9

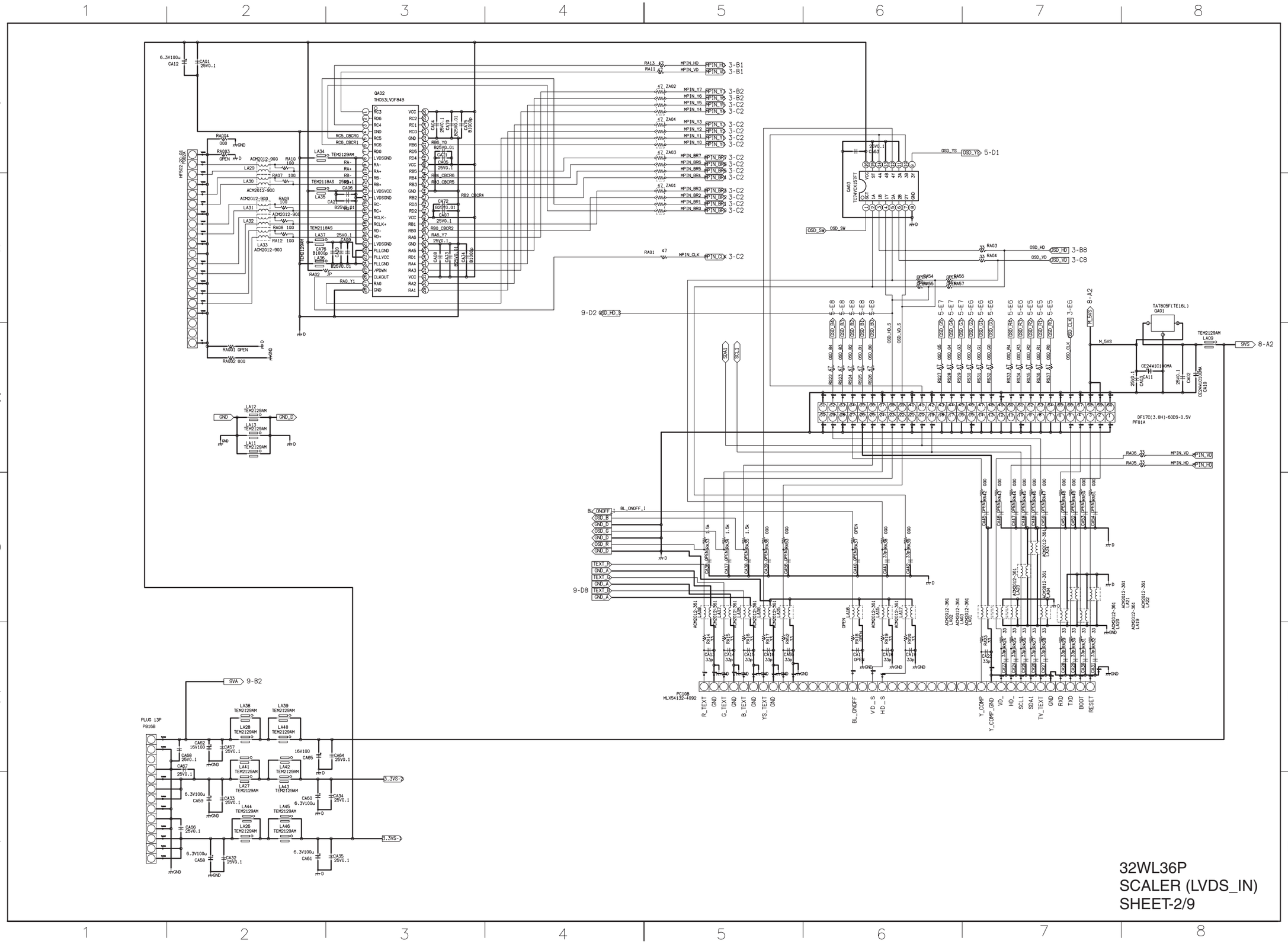
QA02
THC63LVDF84B
QA03
TC74VCX157FT
TA7805F(TE16L)
QA01
DF17C(3.0H)-60DS-0.5V
PF01A
PC10B
MLX54132-4092
PLUG 13P
P816B
32WL36P
SCALER (LVDS_IN)
SHEET-2/9

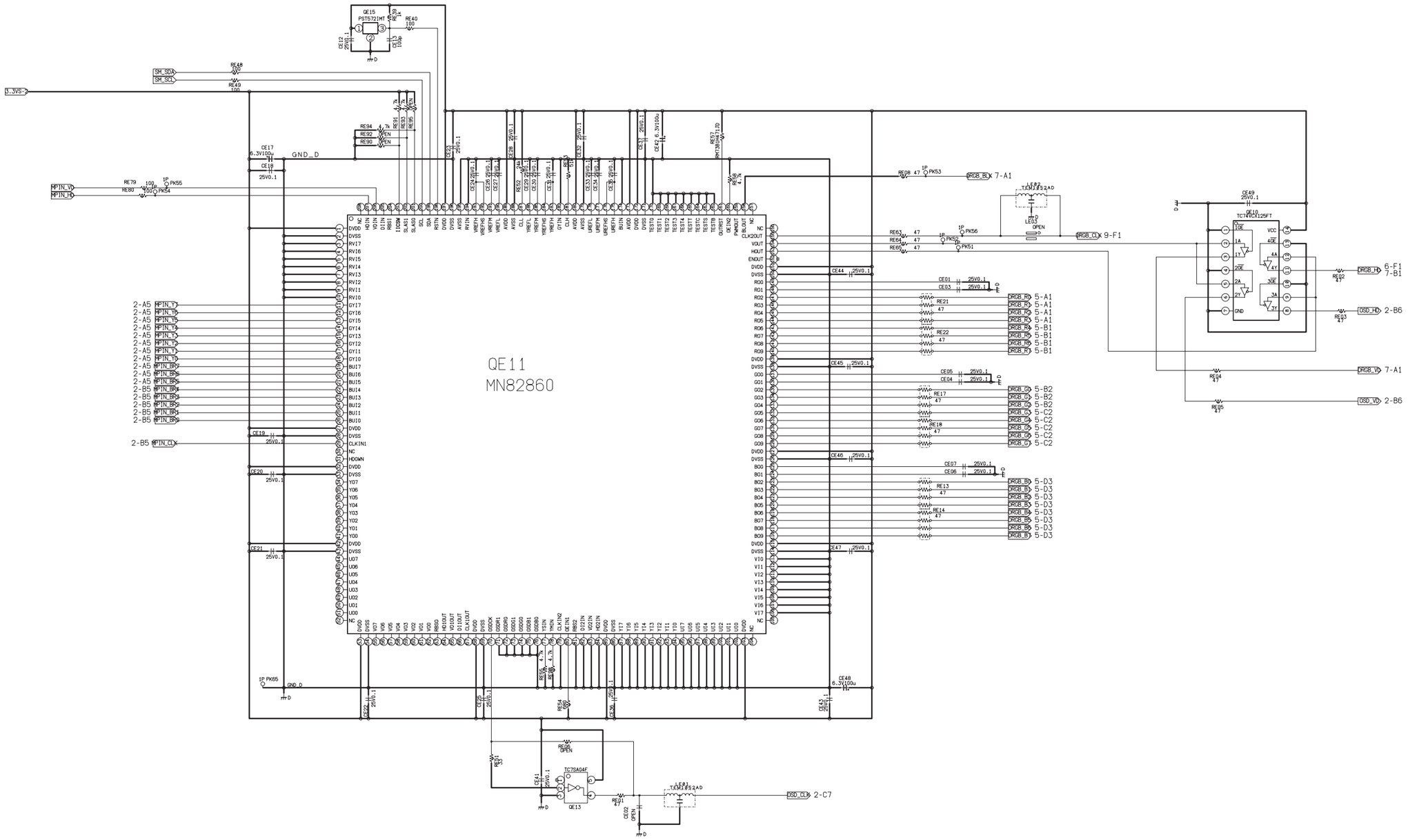

32WL36P
SCALER (DIGITAL RGB Pro.)
SHEET-3/9

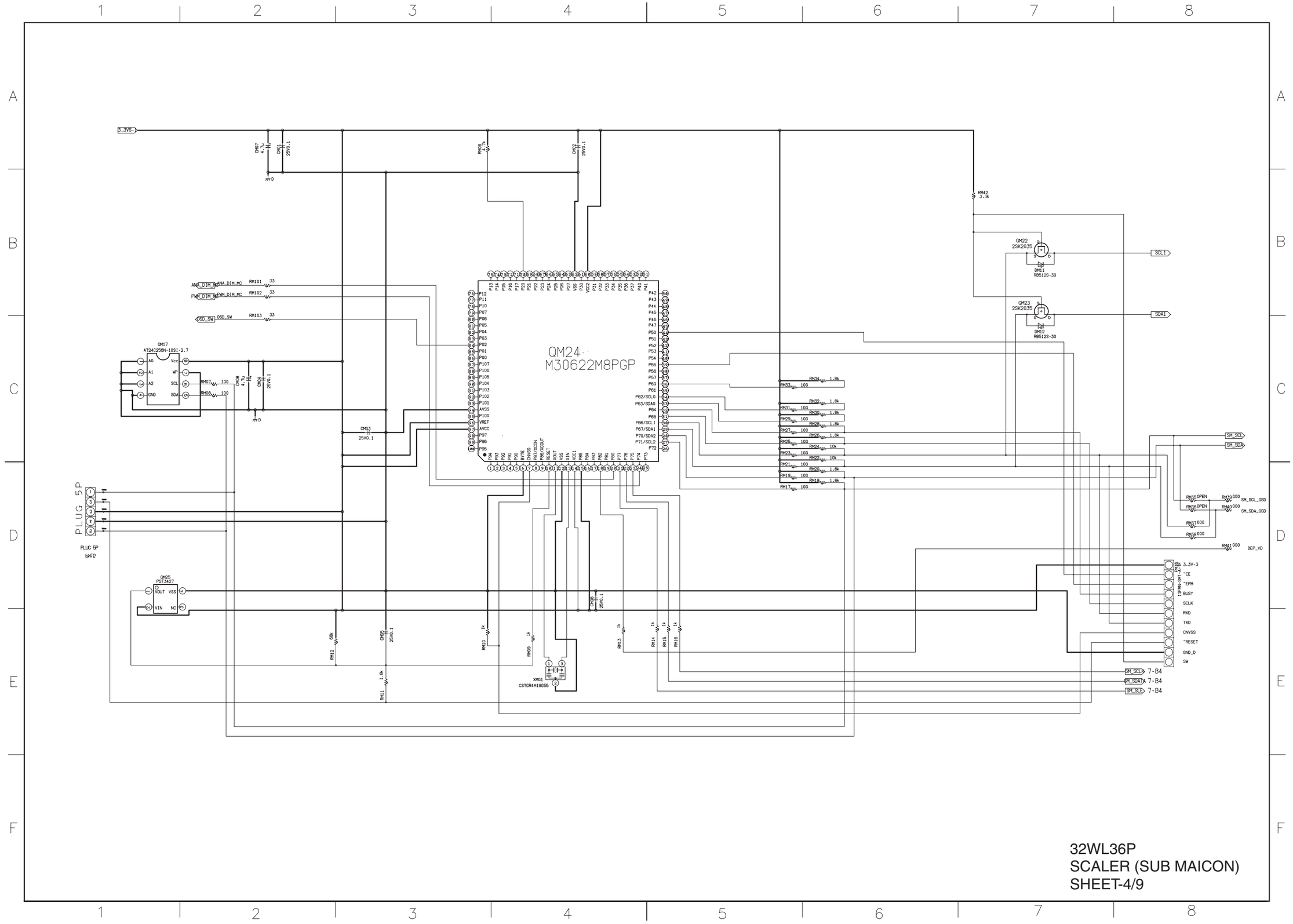

32WL36P
SCALER (SUB MAICON)
SHEET-4/9

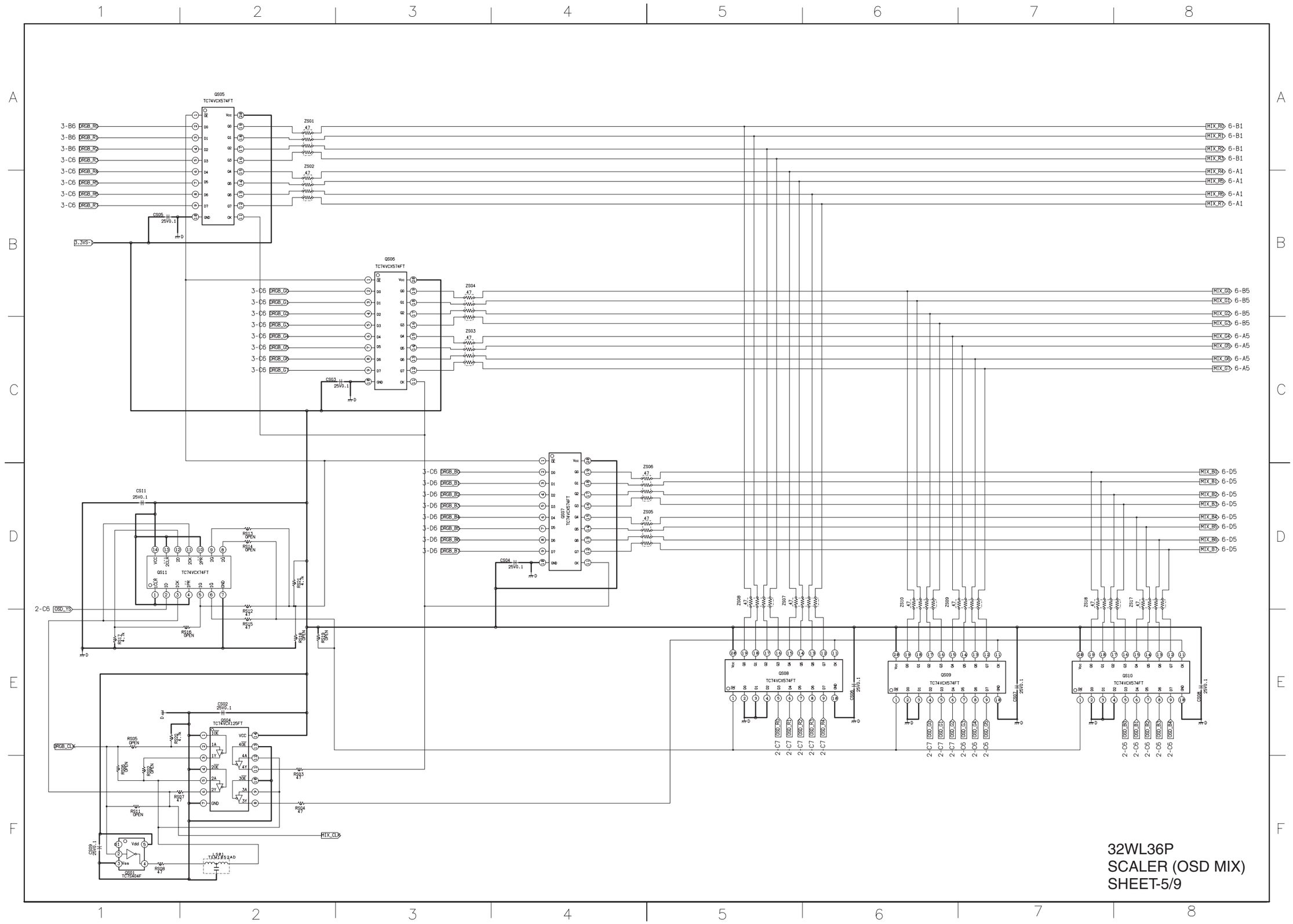
QS05
TC74VCX574FT
QS06
TC74VCX574FT
QS07
TC74VCX574FT
QS08
TC74VCX574FT
QS09
TC74VCX574FT
QS10
TC74VCX574FT
QS11
TC74VCX74FT
QS04
TC74VCX125FT
DS01
TC7SA04F
LS01
TAM1852AD
3.3VS
DRGB_R
DRGB_G
DRGB_B
DRGB_CK
OSD_YS
MIX_CK
MIX_R0
MIX_R1
MIX_R2
MIX_R3
MIX_R4
MIX_R5
MIX_R6
MIX_R7
MIX_G0
MIX_G1
MIX_G2
MIX_G3
MIX_G4
MIX_G5
MIX_G6
MIX_G7
MIX_B0
MIX_B1
MIX_B2
MIX_B3
MIX_B4
MIX_B5
MIX_B6
MIX_B7
OSD_R0
OSD_R1
OSD_R2
OSD_R3
OSD_R4
OSD_R5
OSD_R6
OSD_R7
OSD_G0
OSD_G1
OSD_G2
OSD_G3
OSD_G4
OSD_G5
OSD_G6
OSD_G7
OSD_B0
OSD_B1
OSD_B2
OSD_B3
OSD_B4
OSD_B5
OSD_B6
OSD_B7
32WL36P
SCALER (OSD MIX)
SHEET-5/9

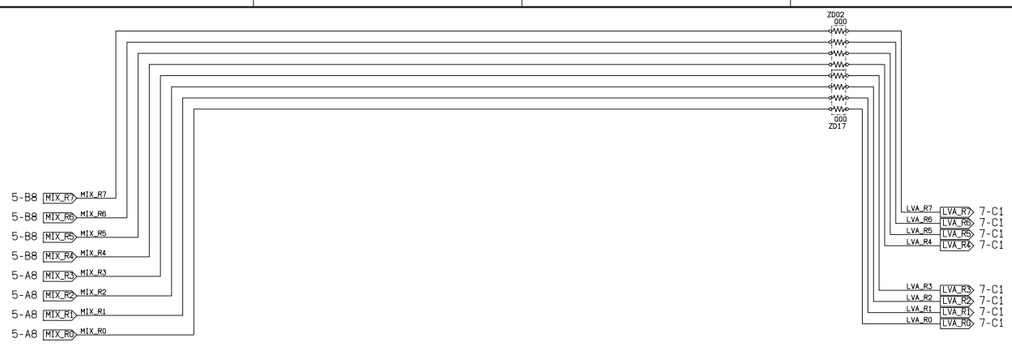

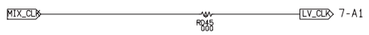

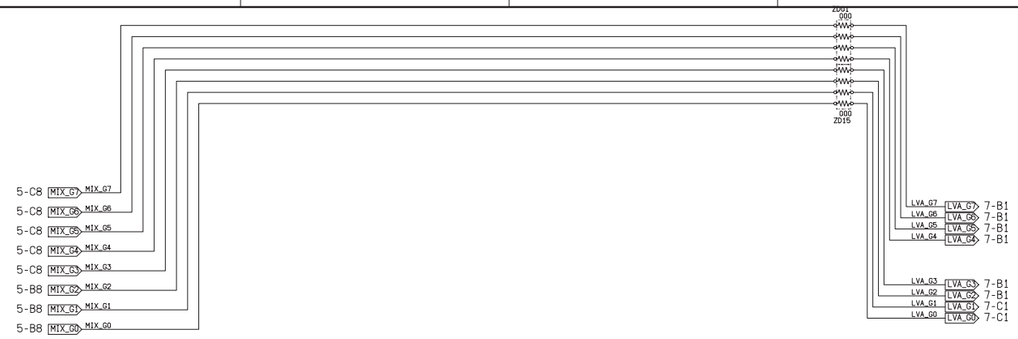

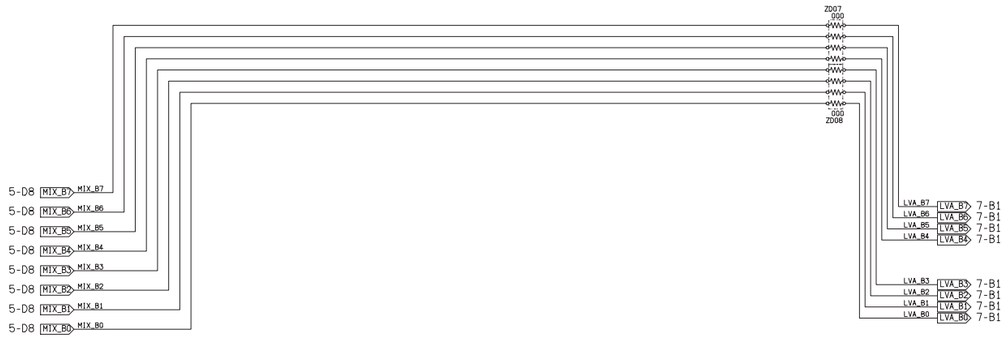

32WL36P
SCALER (OSD±MIX)
SHEET-6/9

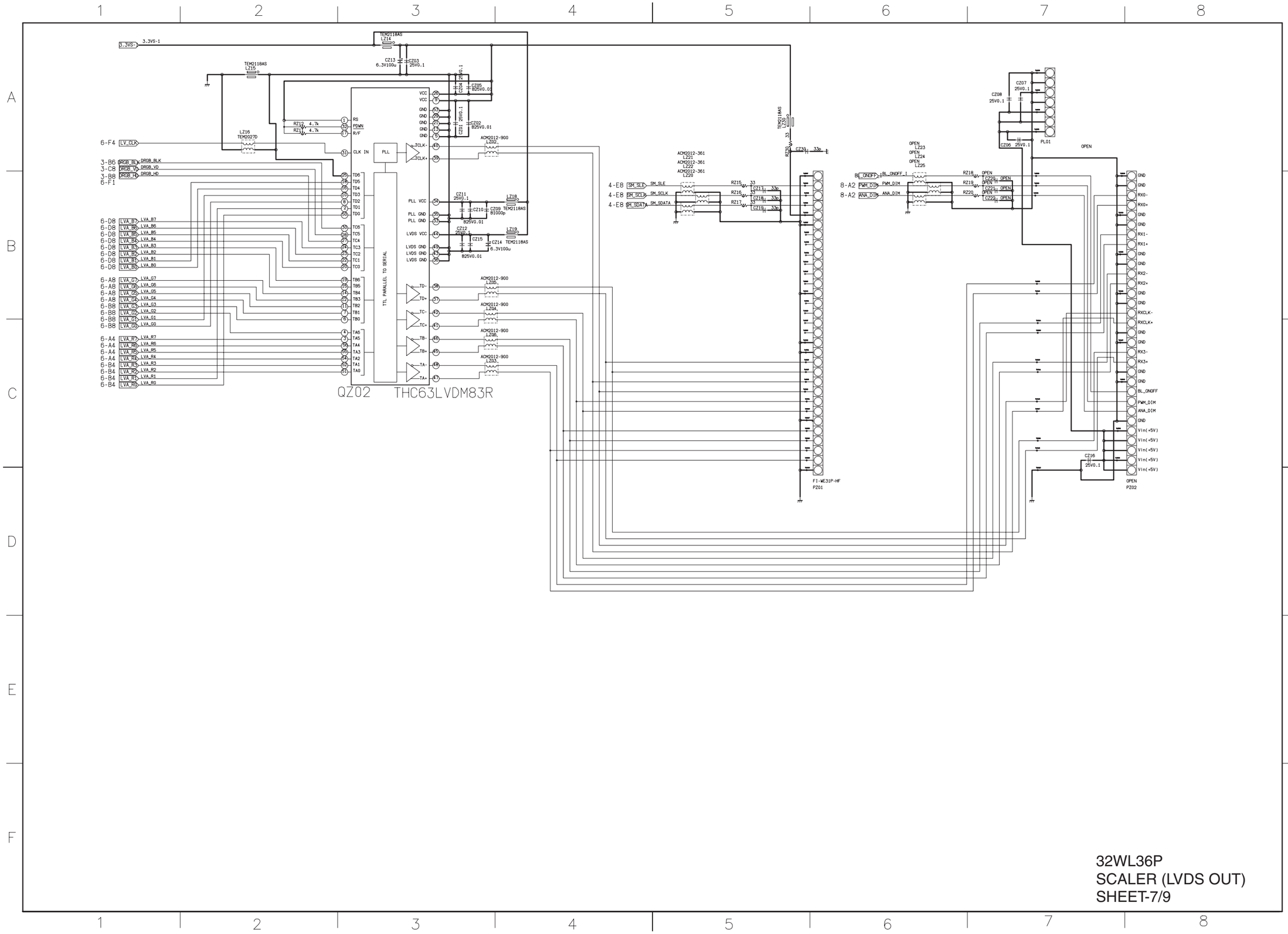

32WL36P
SCALER (LVDS OUT)
SHEET-7/9

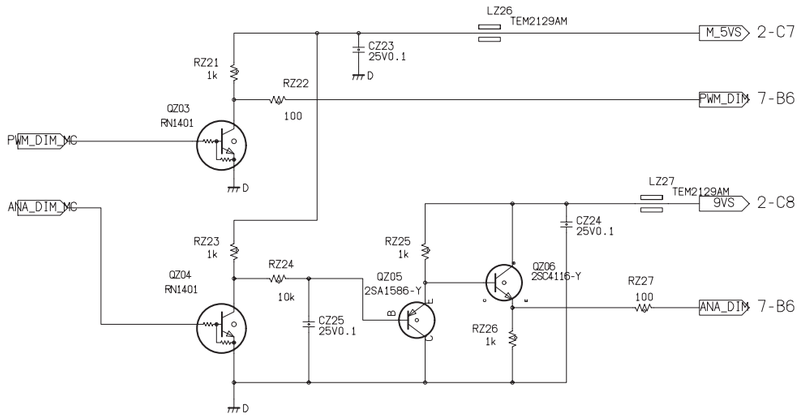

32WL36P
SCALER (8/9)
SHEET-8/9

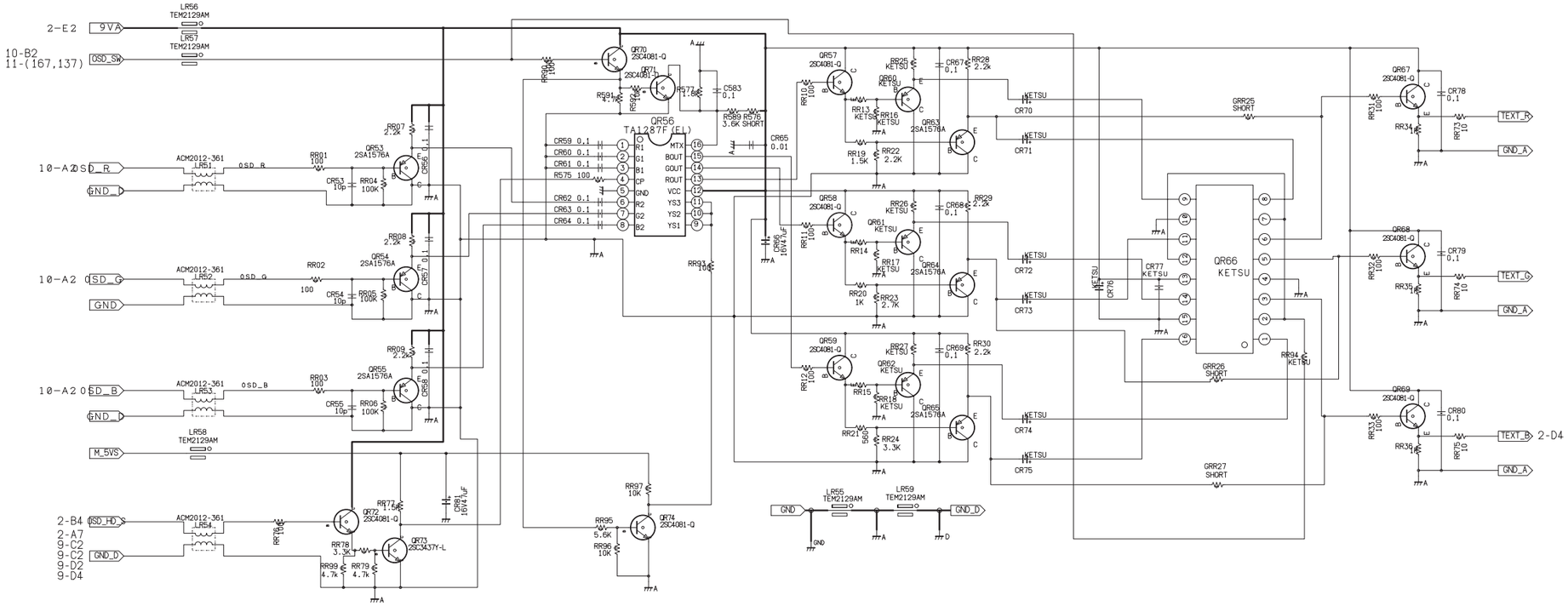

32WL36P
SCALER (ANALOG OSD/TEXT)
SHEET-9/9

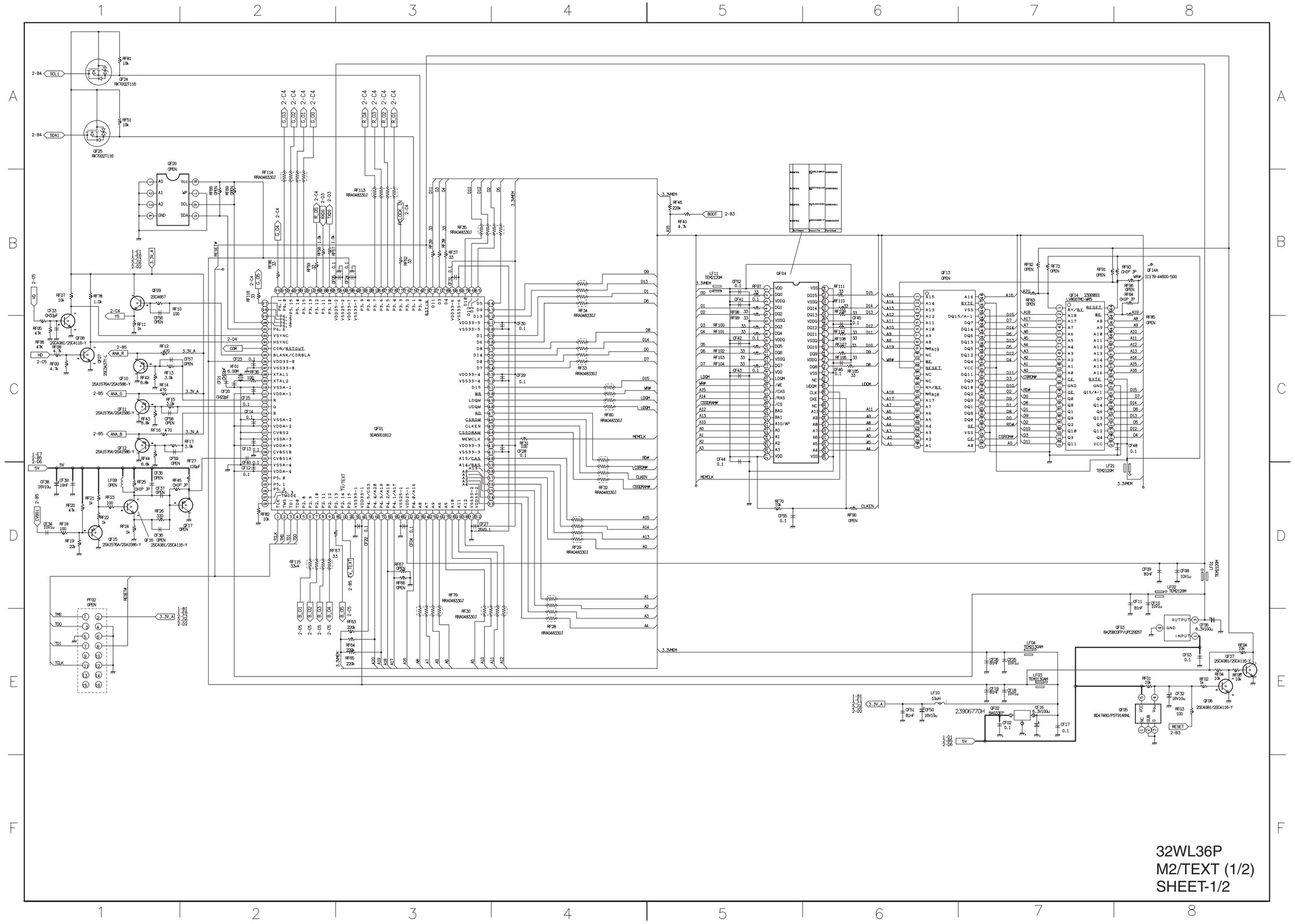
32WL36P
M2/TEXT (1/2)
SHEET-1/2

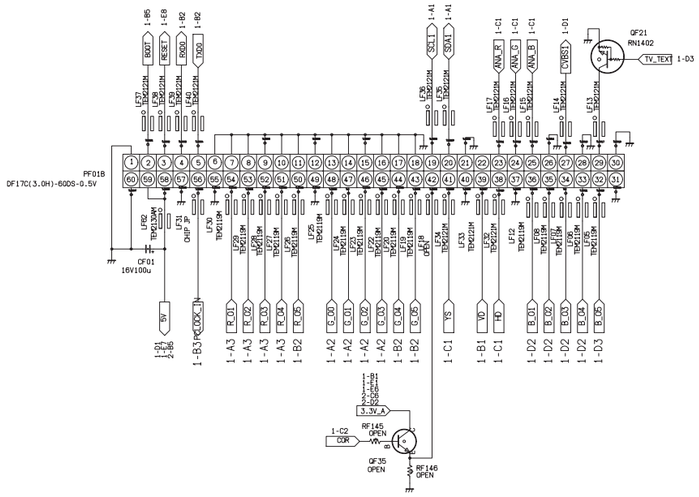

32WL36P
M2/TEXT (2/2)
SHEET-2/2

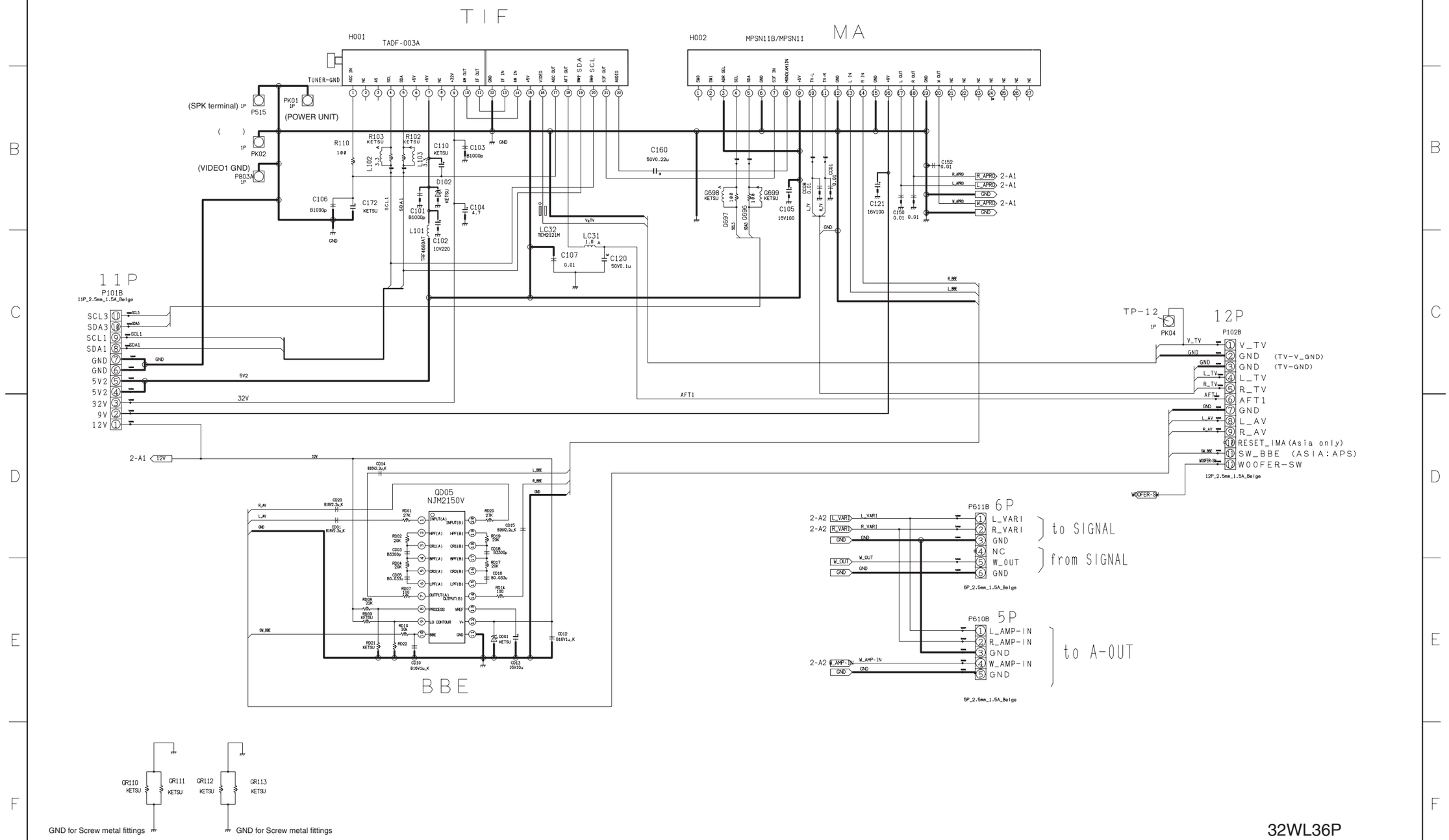

32WL36P
TIF-MA (TIF&MA)
SHEET-1/2

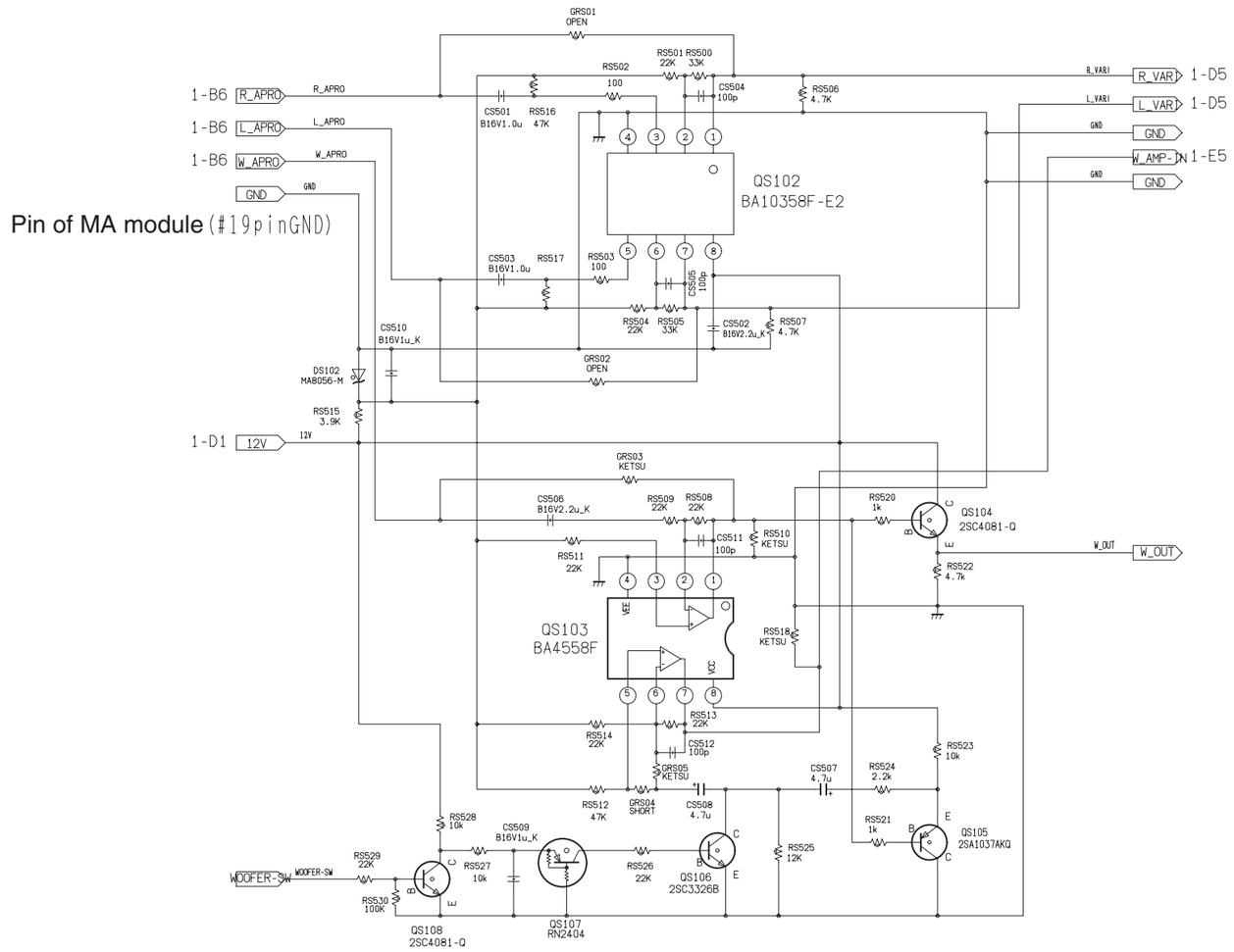

32WL36P
TIF-MA (AUDIO GAIN COMPENSATION)
SHEET-2/2

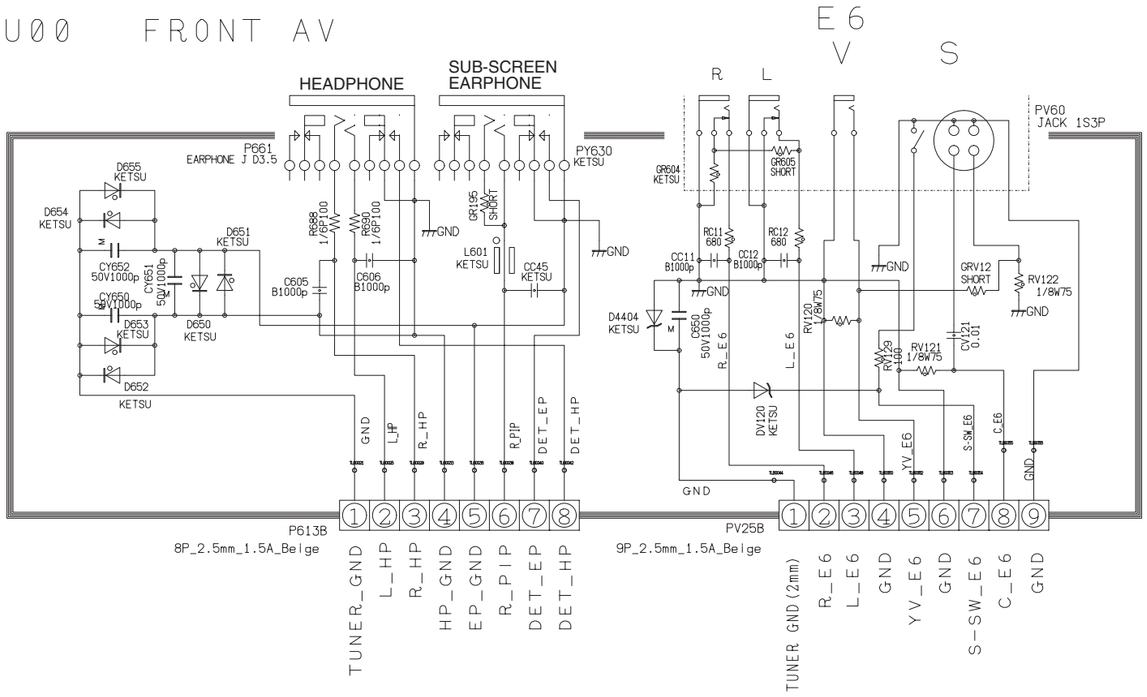

32WL36P
FRONT AV

U00 KEY

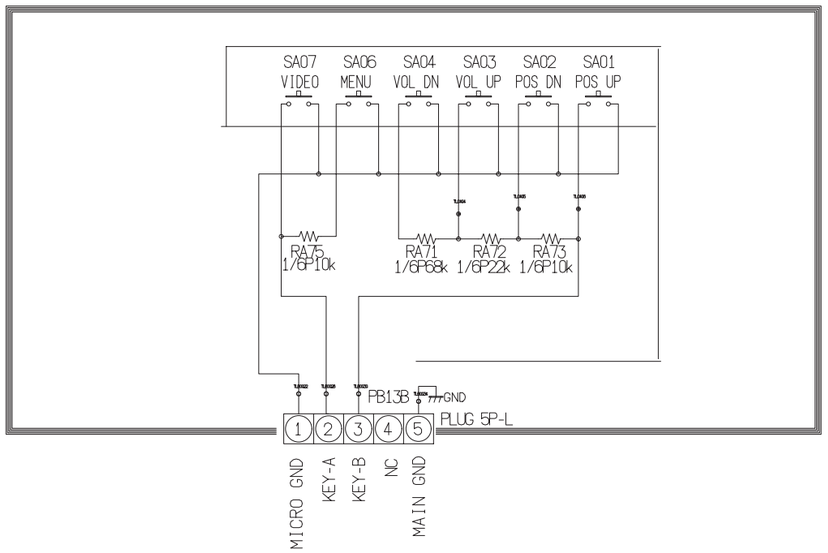

32WL36P
KEY

U0 LED/RMT

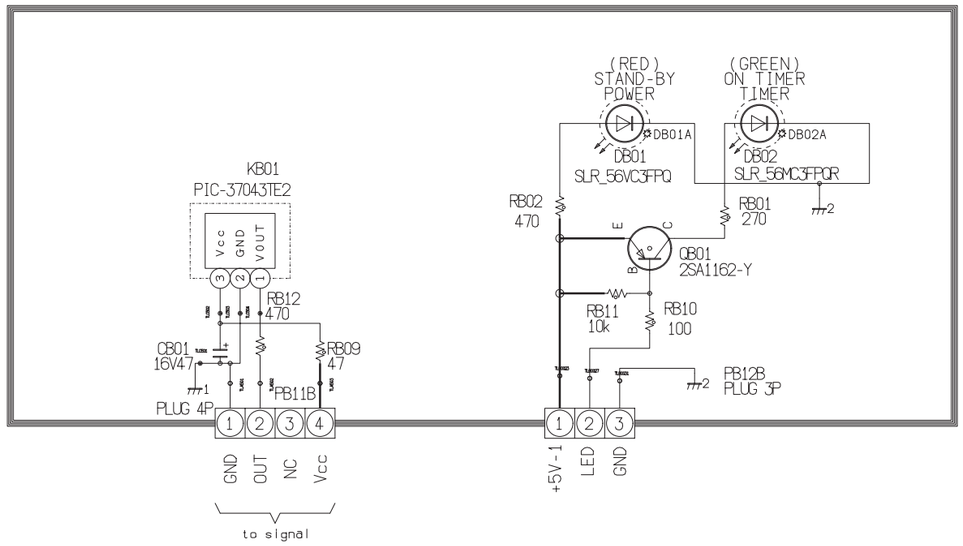

32WL36P
LED RMT

U0 PC

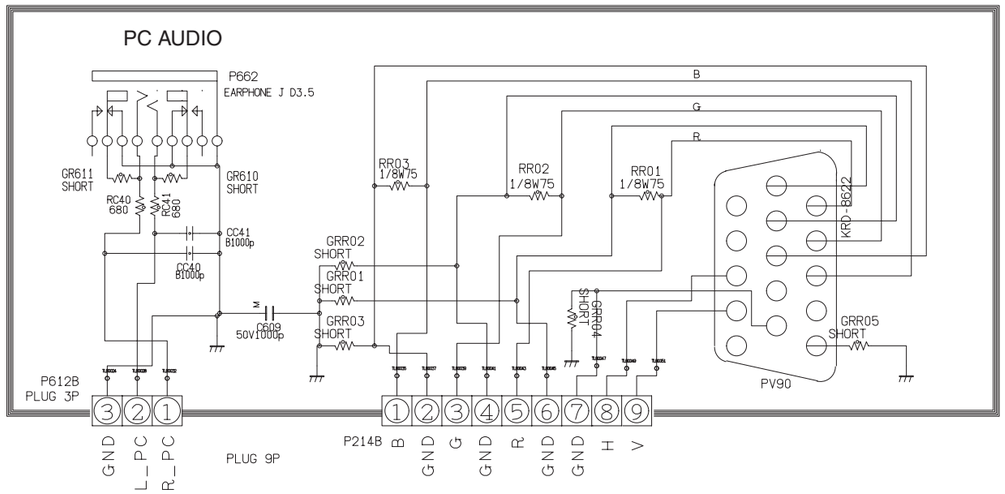

32WL36P
PC INPUT

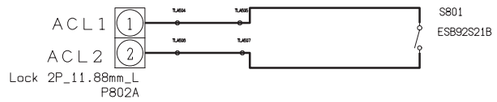

32WL36P
POWER SW

U00 3D MOD

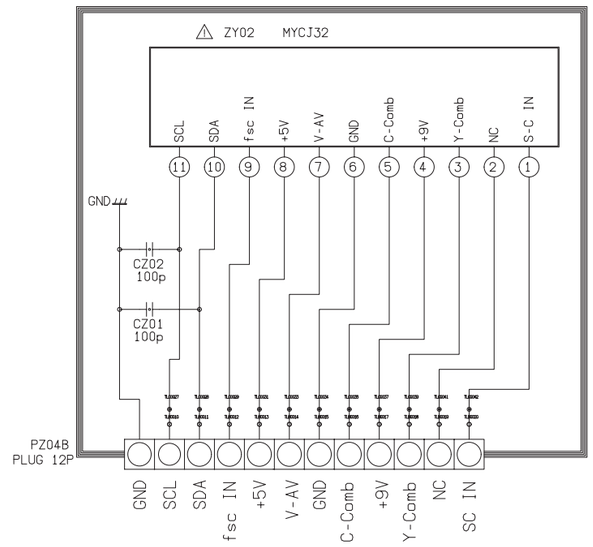

32WL36P
3D YCS

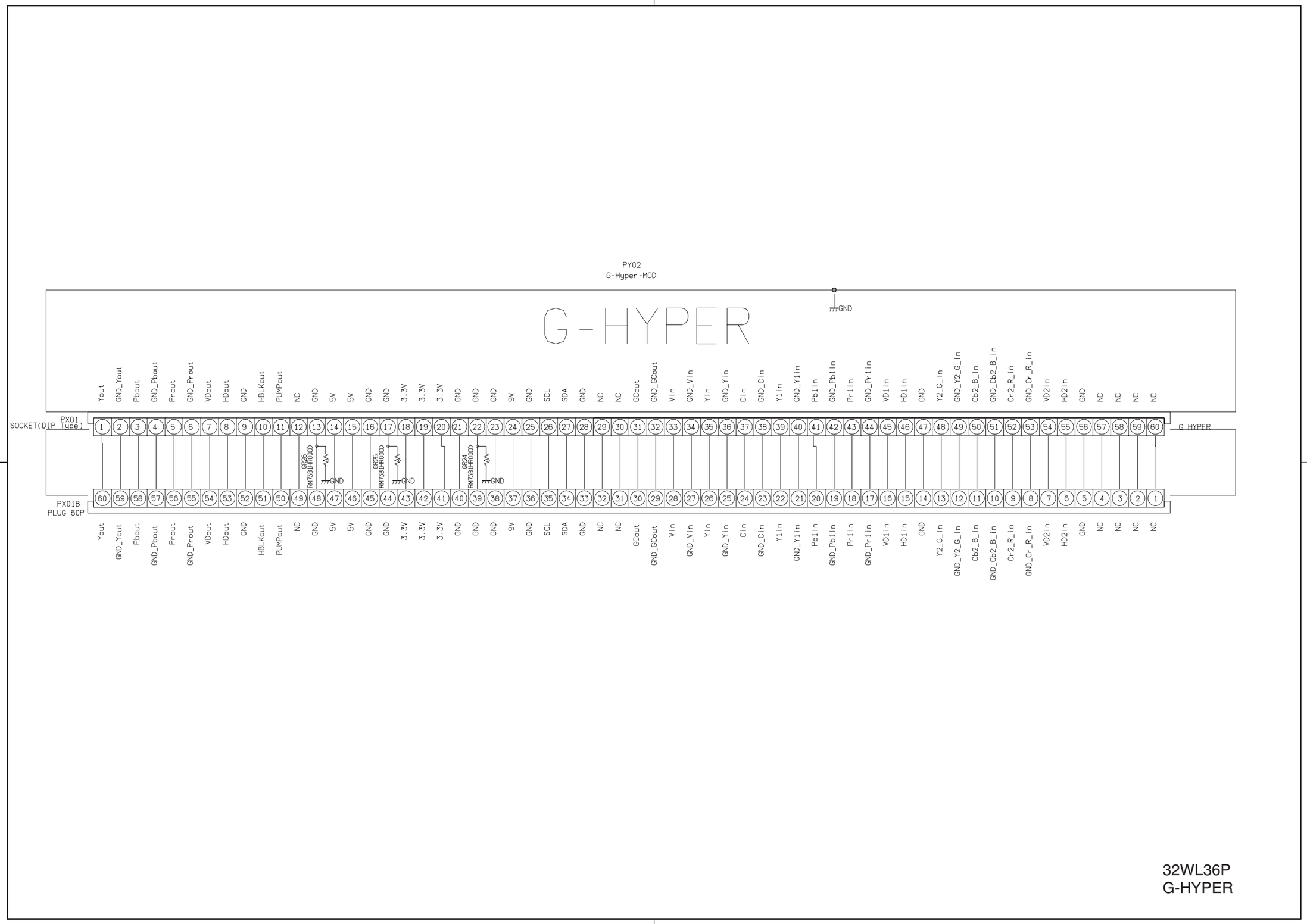
PY02
G-Hyper -MOD
G-HYPER
GND
SOCKET(DIP Type)
PX01
G_HYPER
PX01B
PLUG 60P
Yout GND_Yout Pbout GND_Pbout Prout GND_Prout VDout HDout GND HBLKout PUMPout NC GND 5V 5V GND GND 3.3V 3.3V 3.3V GND GND GND 9V GND SCL SDA GND NC NC GCout GND_GCout Vin GND_Vin Yin GND_Yin Cin GND_Cin Y1in GND_Y1in Pb1in GND_Pb1in Pr1in GND_Pr1in VD1in HD1in GND Y2_G_in GND_Y2_G_in Cb2_B_in GND_Cb2_B_in Cr2_R_in GND_Cr_R_in VD2in HD2in GND NC NC NC NC
GR26 RM73B1HR000D
GR25 RM73B1HR000D
GR24 RM73B1HR000D
32WL36P
G-HYPER

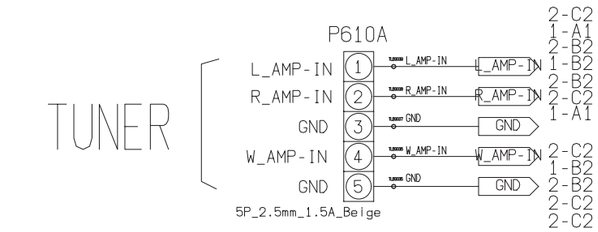

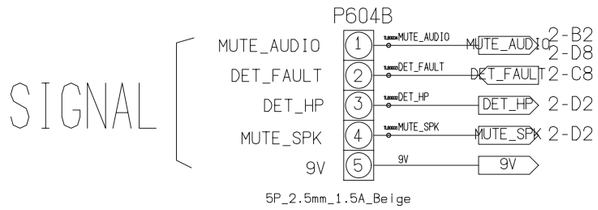

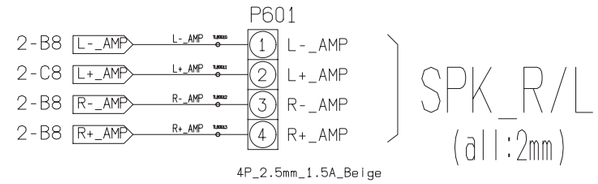

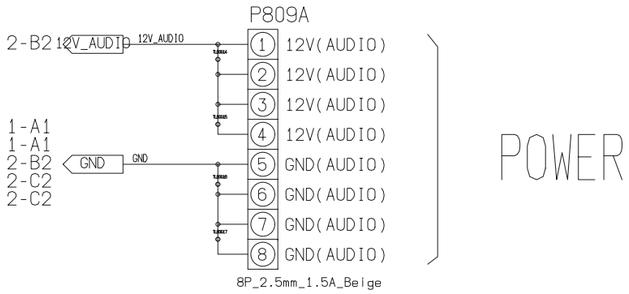

32WL36P
A-OUT (1/2)
SHEET-1/2

The surface patterns under Q610 and Q6100 should be GND, and make many more through-holes between suface GNDs as much as possible.

Corresponded to shielding (should be enclosed with GND)

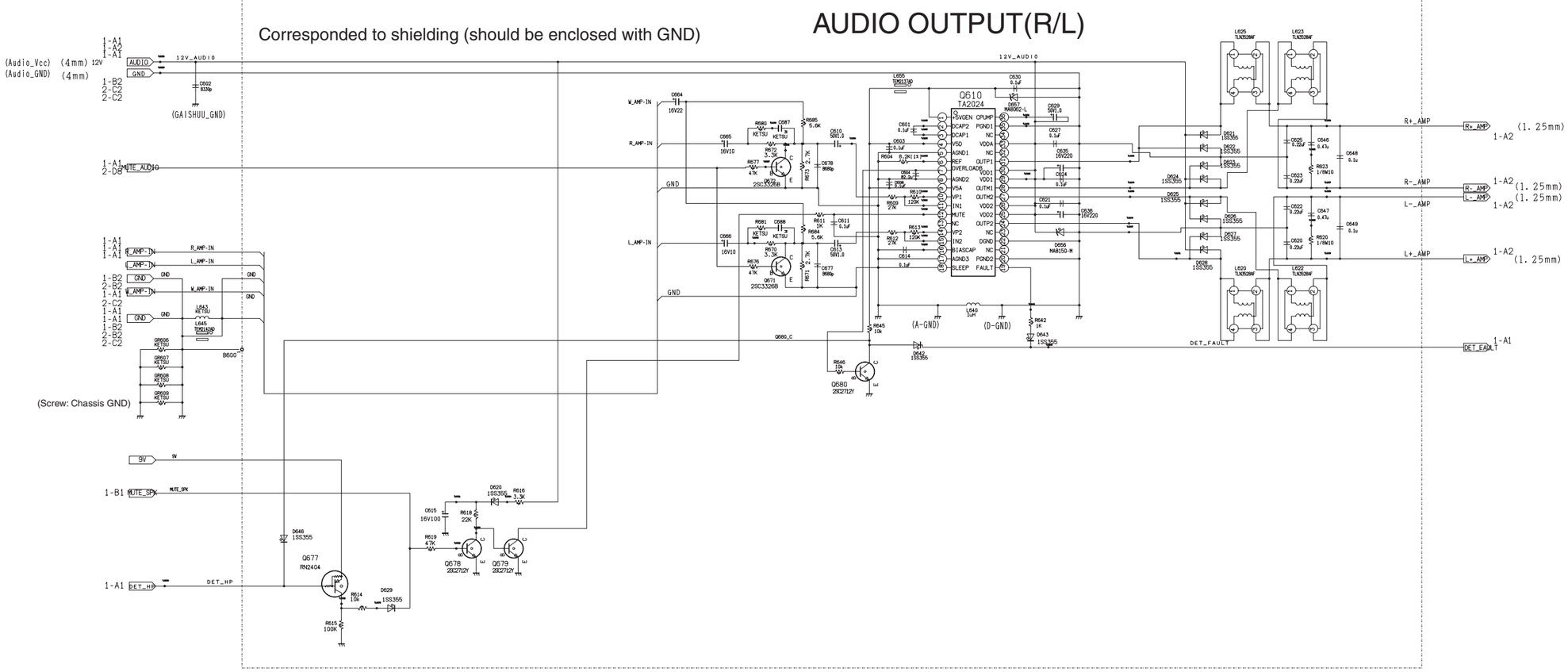

32WL36P
A-OUT (2/2)
SHEET-2/2

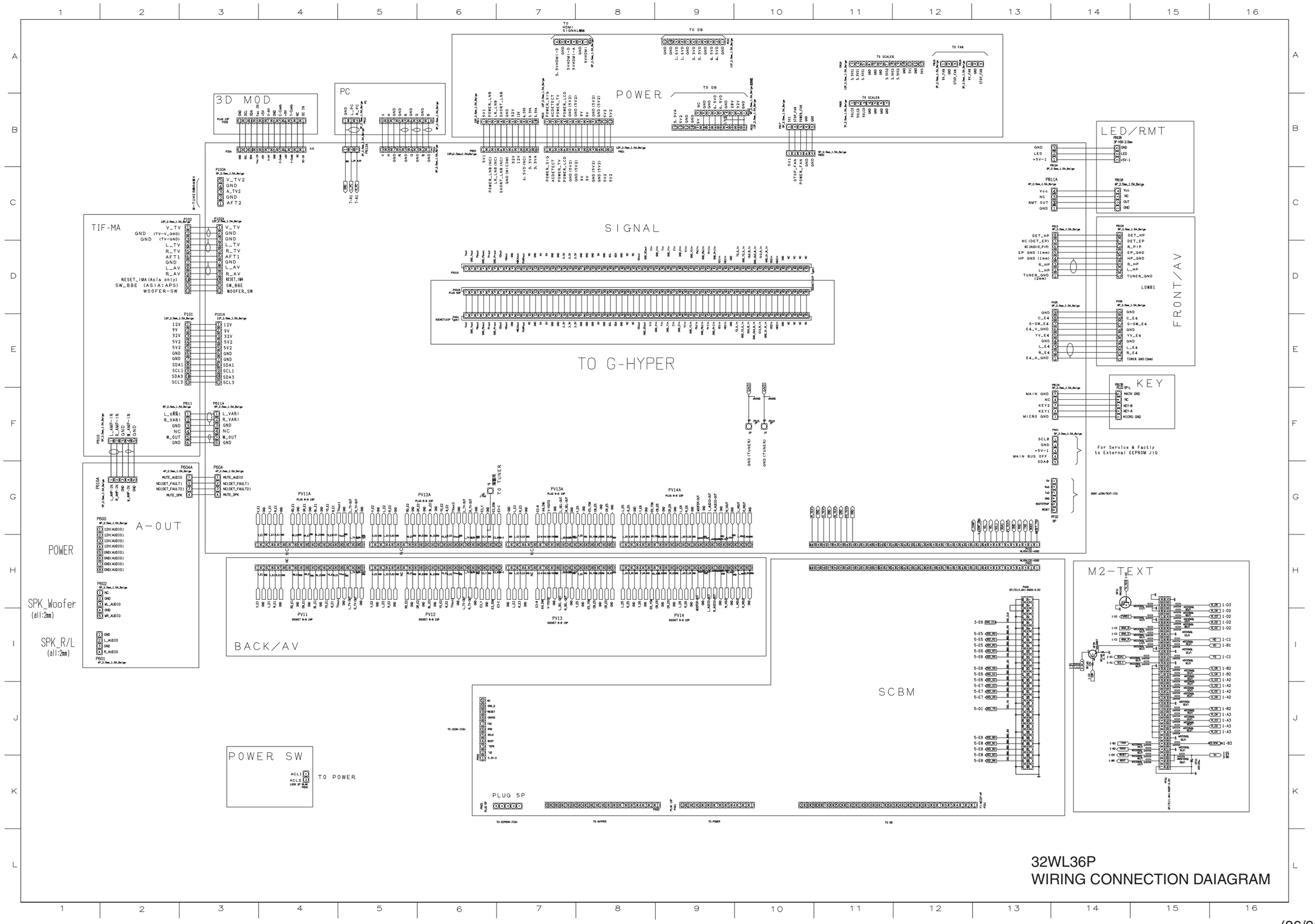

32WL36P
WIRING CONNECTION DAIAGRAM