TP.MS3463S.PB801
Trouble Shooting

—Power supply

—Display

—Audio

—Function

TV Author : SHITENG WANG Checked By :

POWER Author : ZHIAN HE Checked By :

1. Power Supply Block diagram

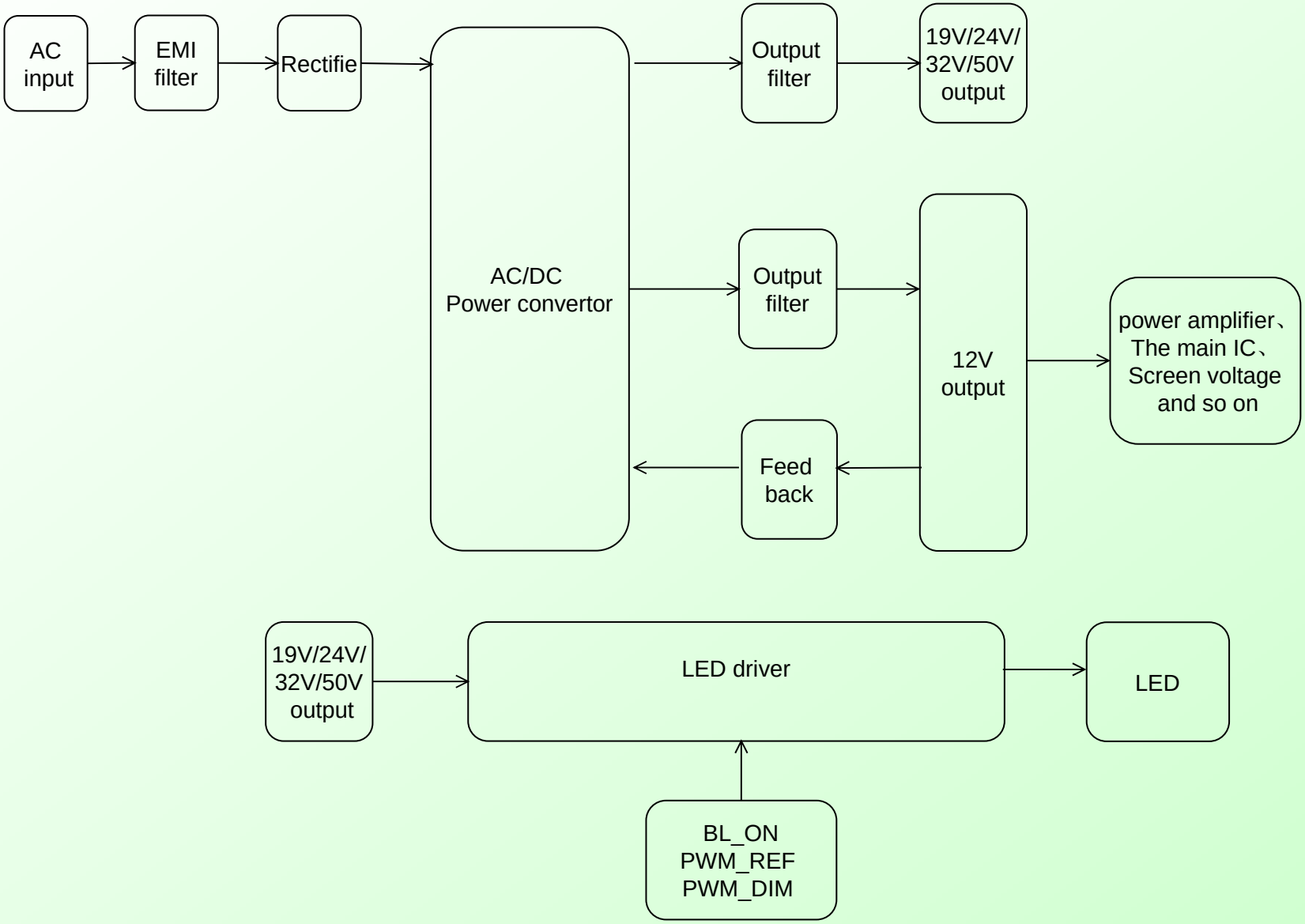

2. Power Supply Trouble

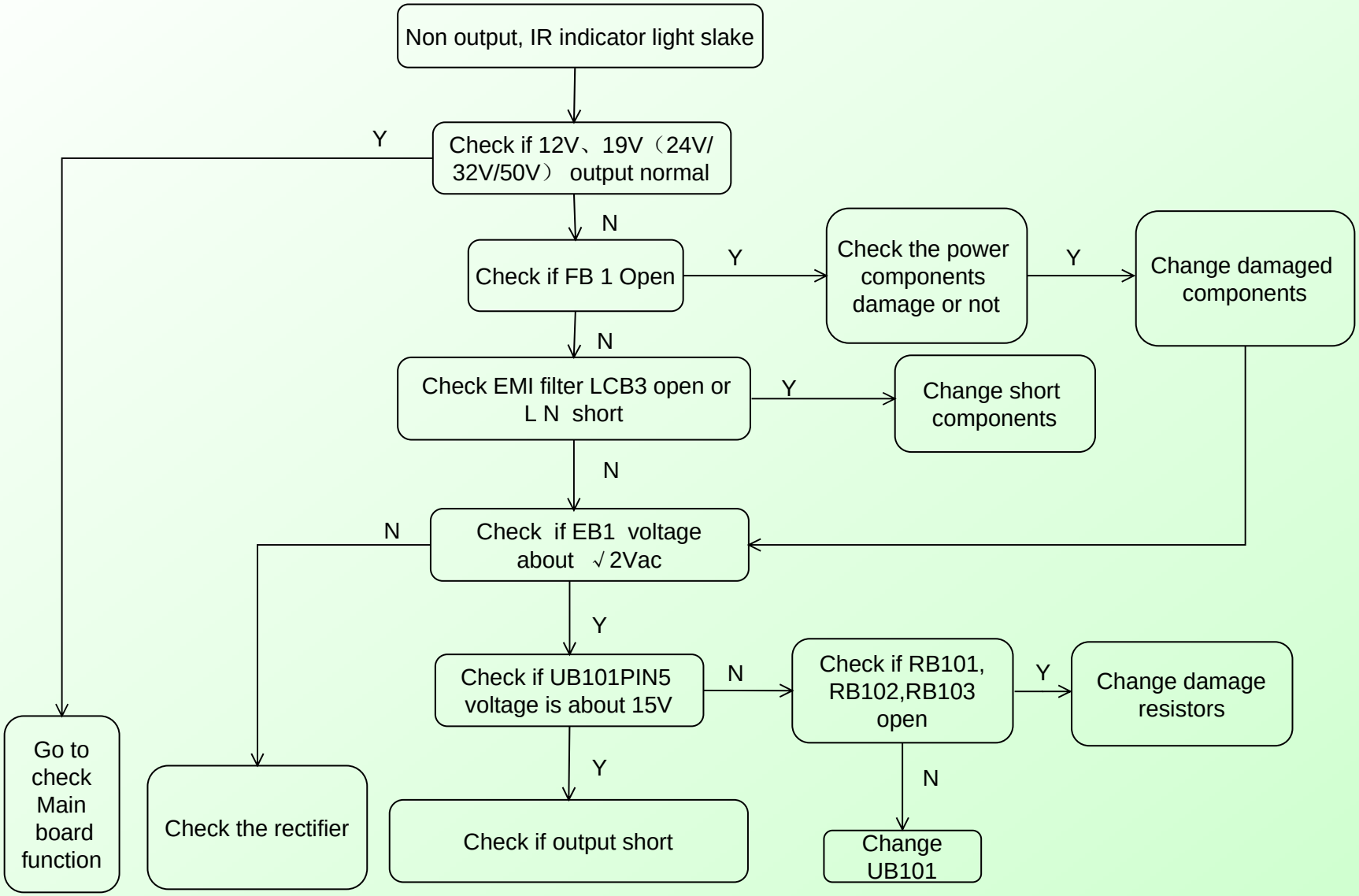

3. Power supply for LED drive

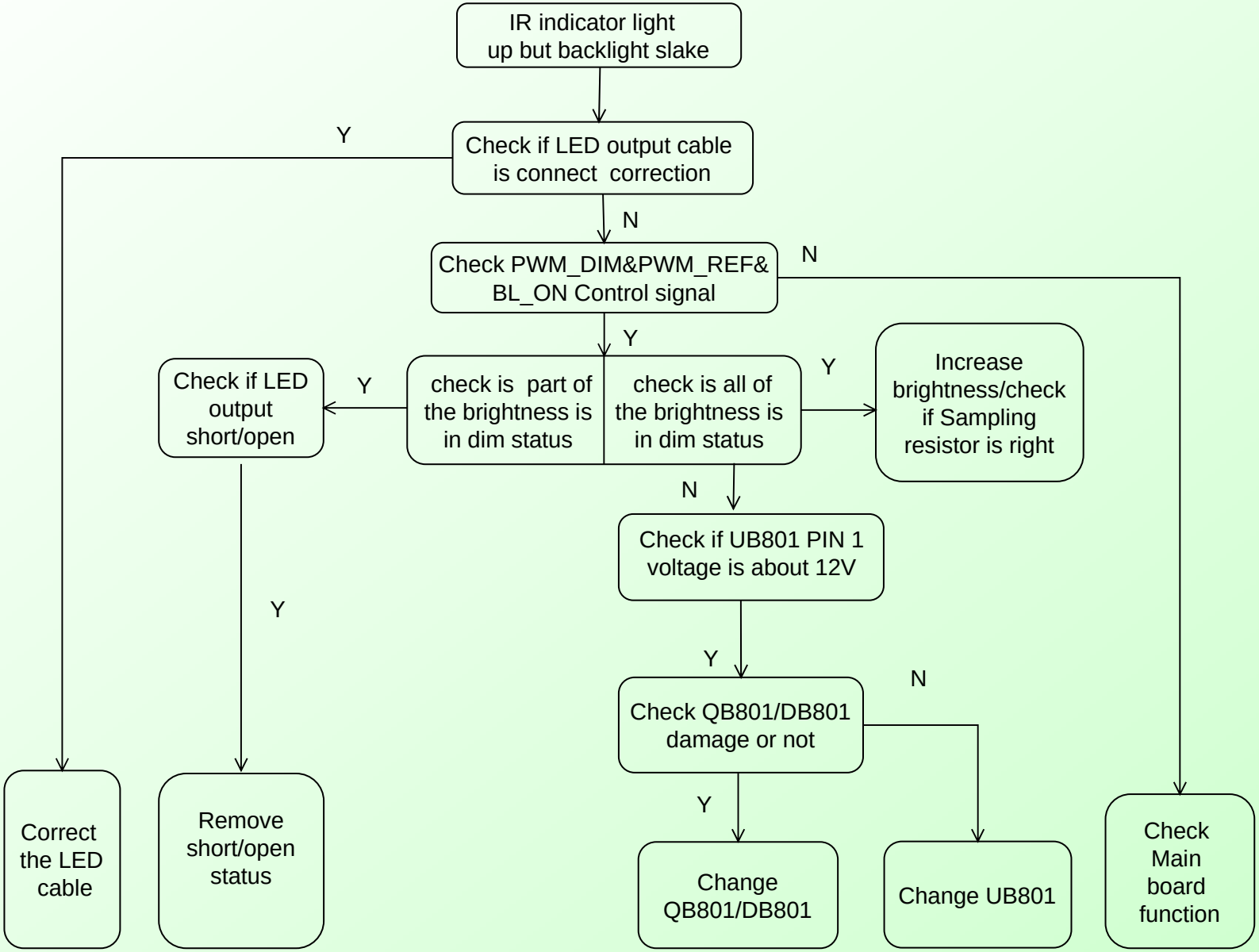

4. Main board Power Supply Trouble

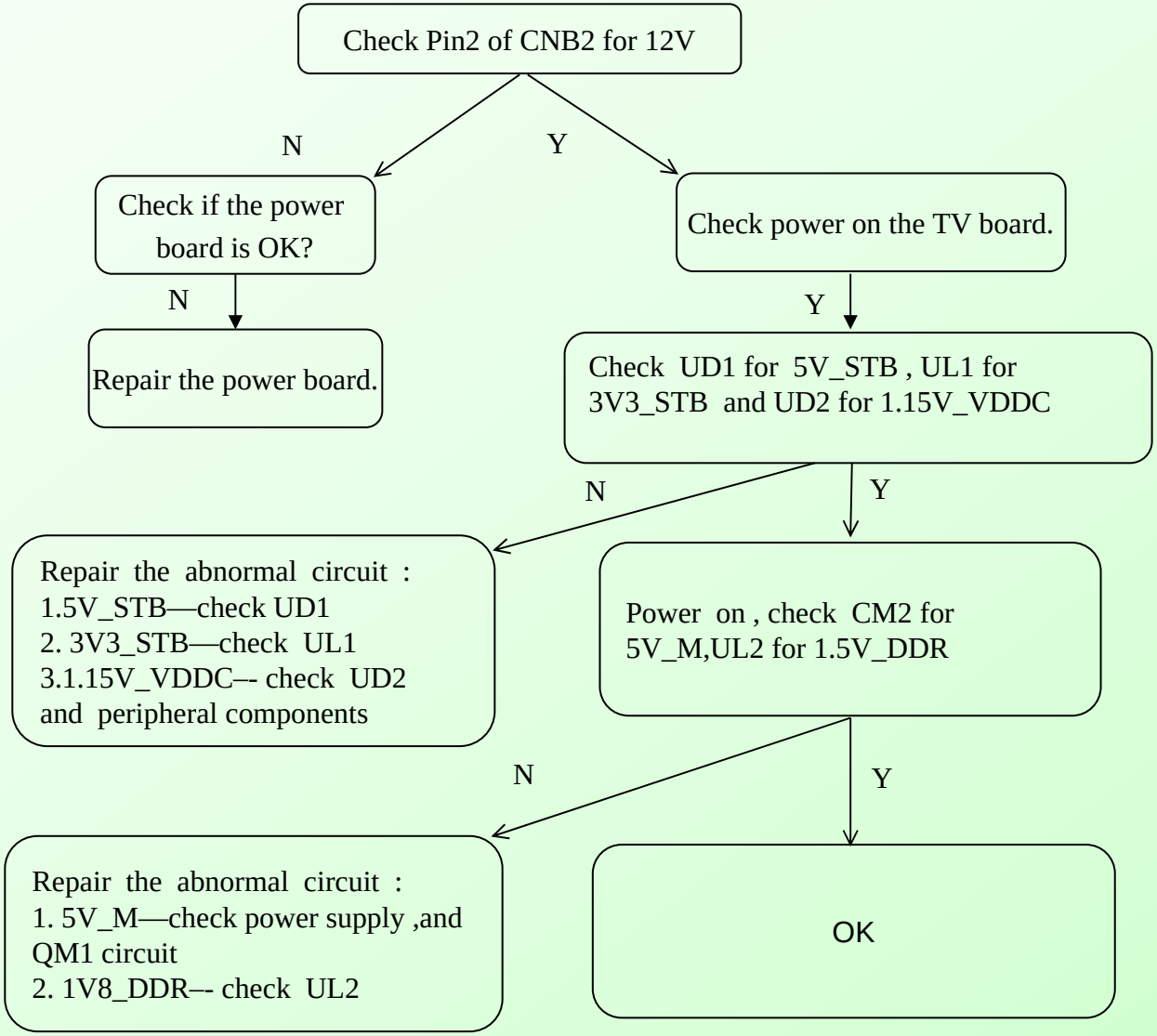

5. Display Trouble（blurred screen）

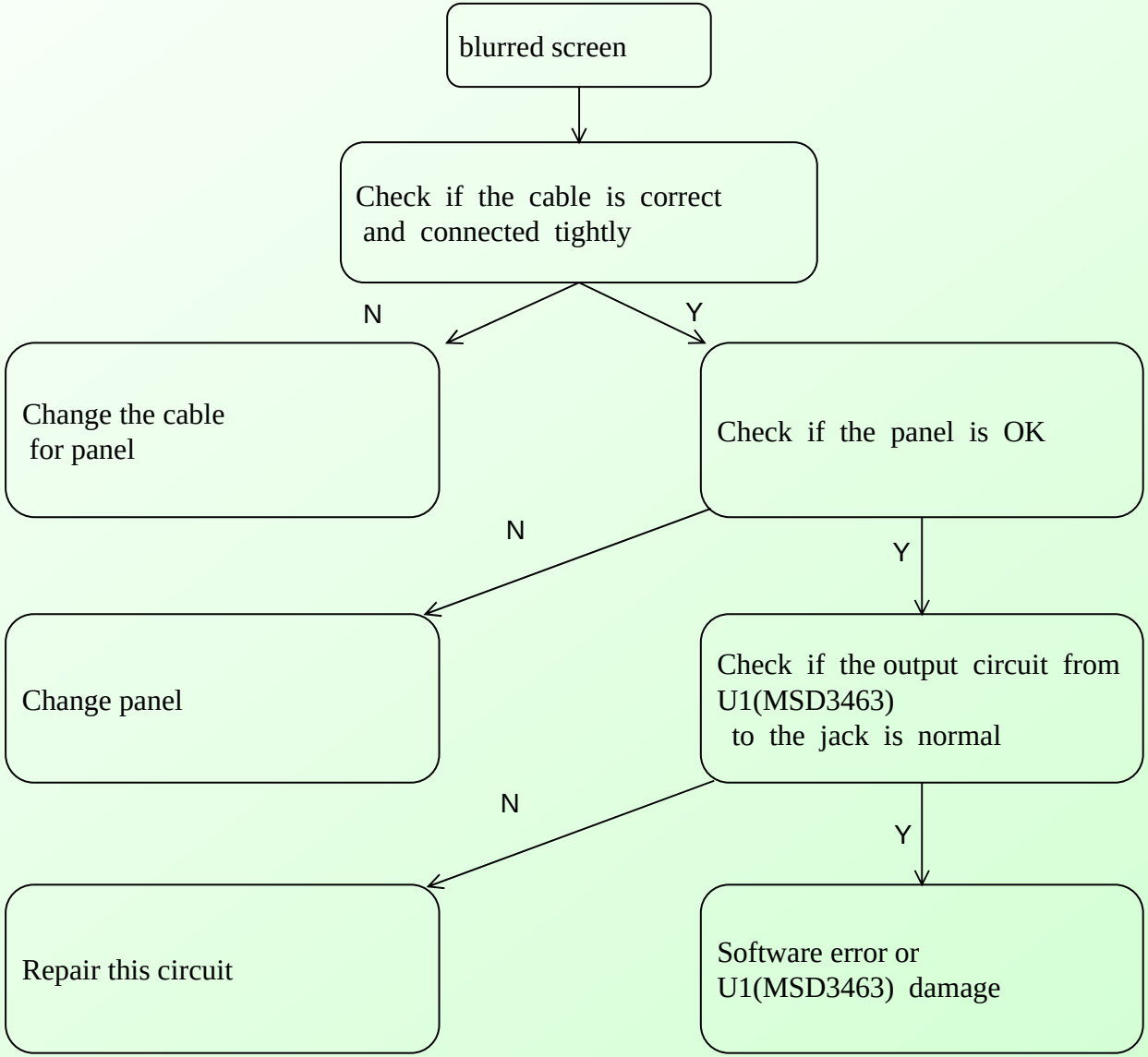

6. Display Trouble （white screen）

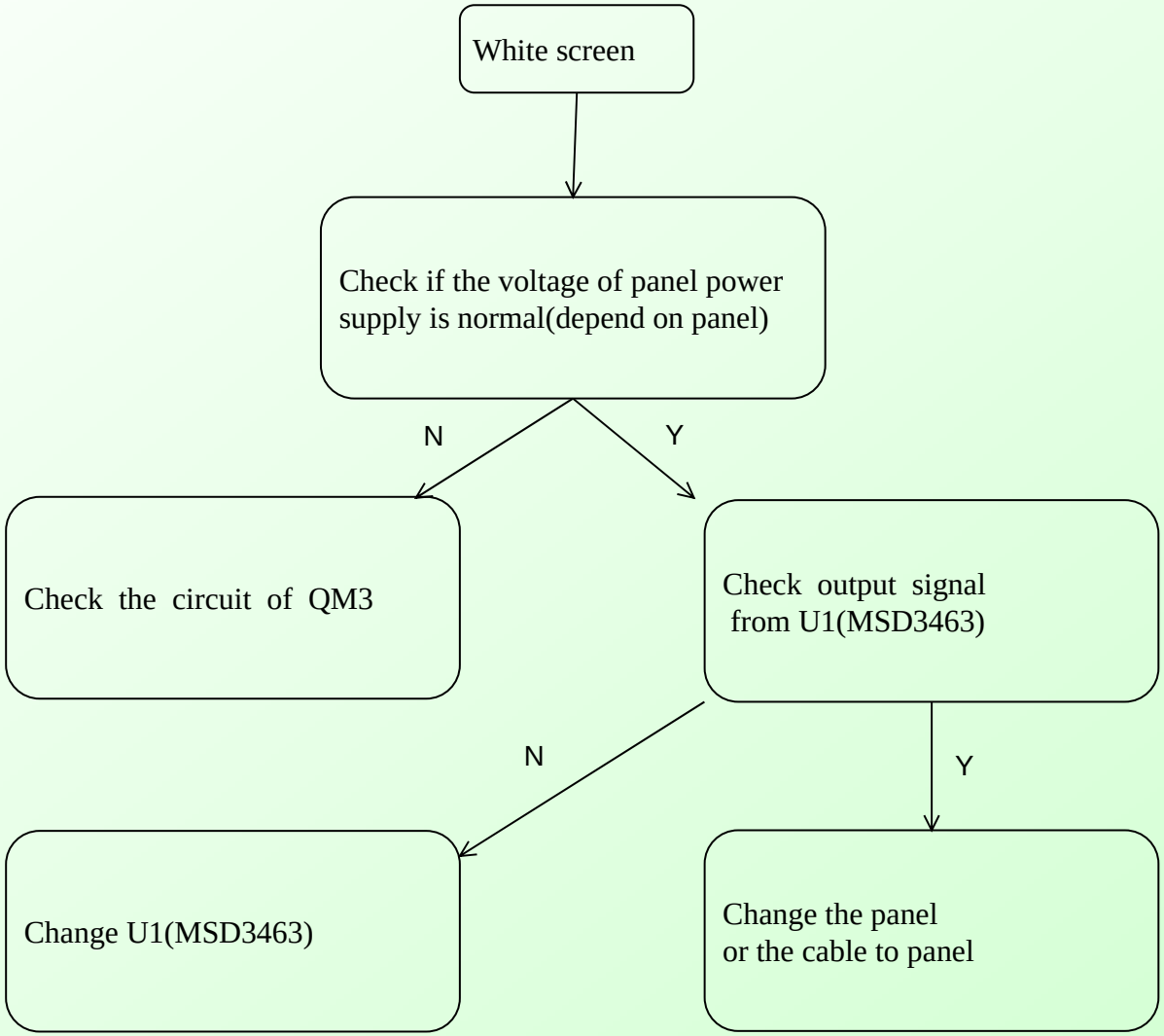

7. Display Trouble（black screen）

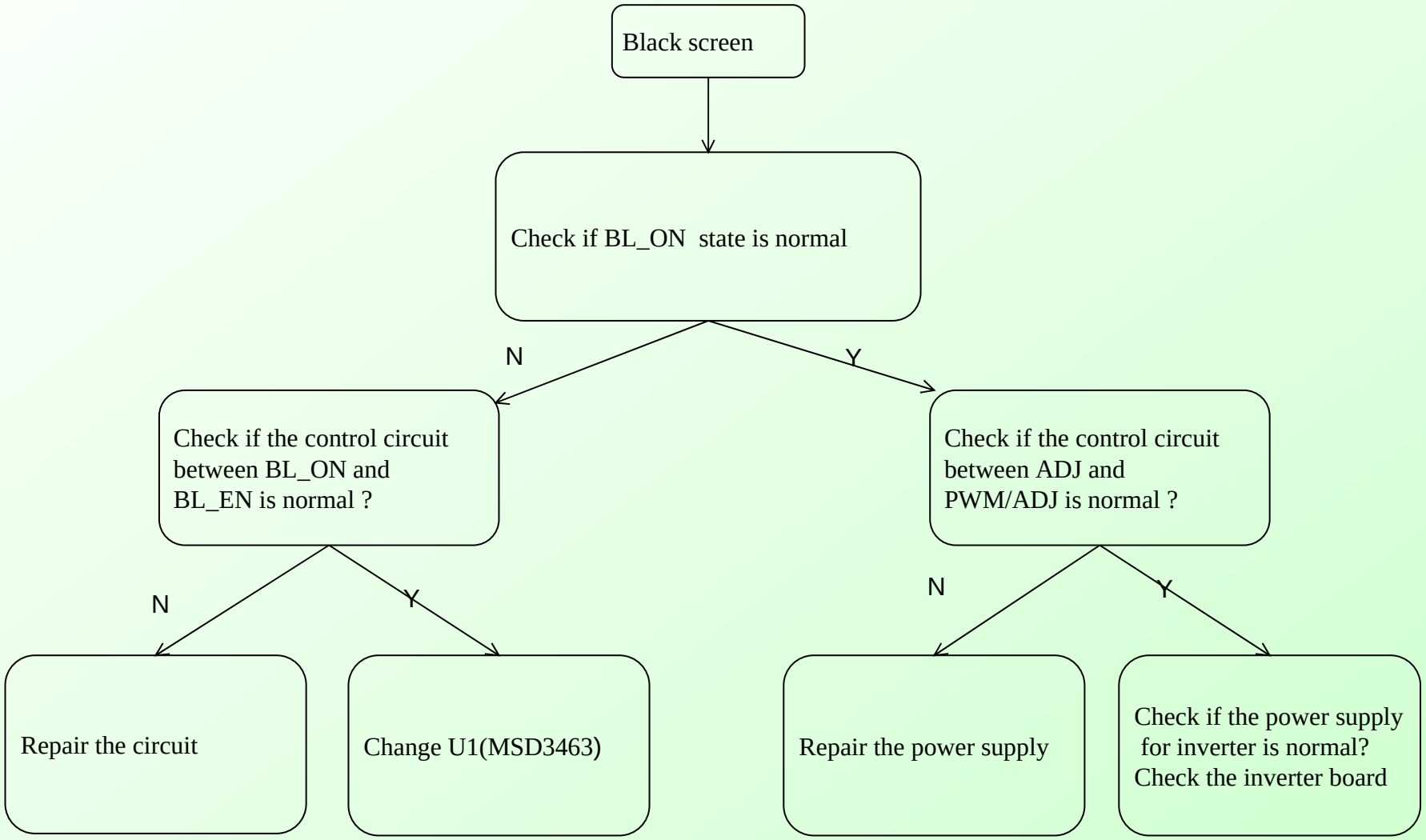

8. Audio Trouble（No sound)

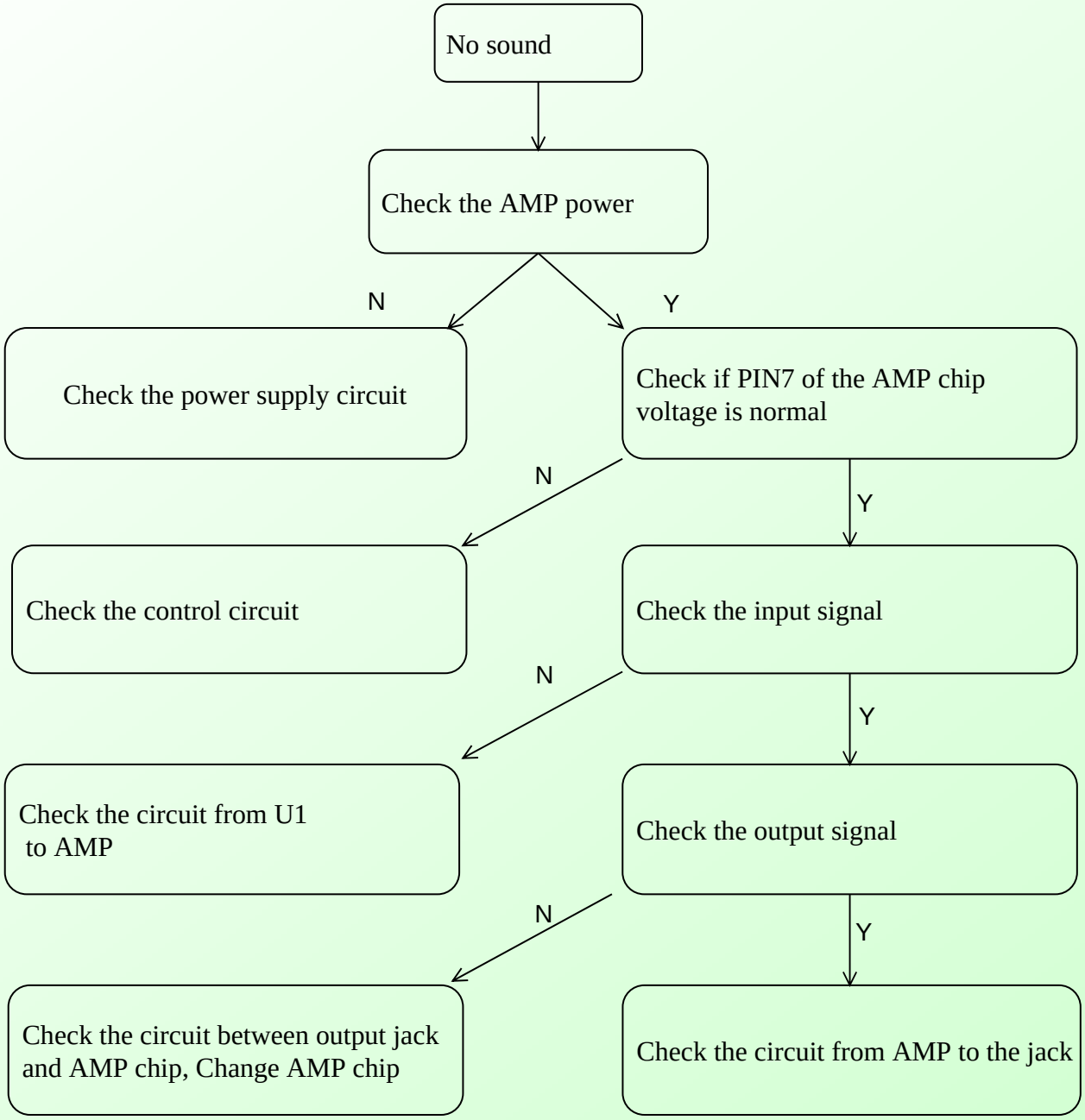

9. Function Trouble（TV video）

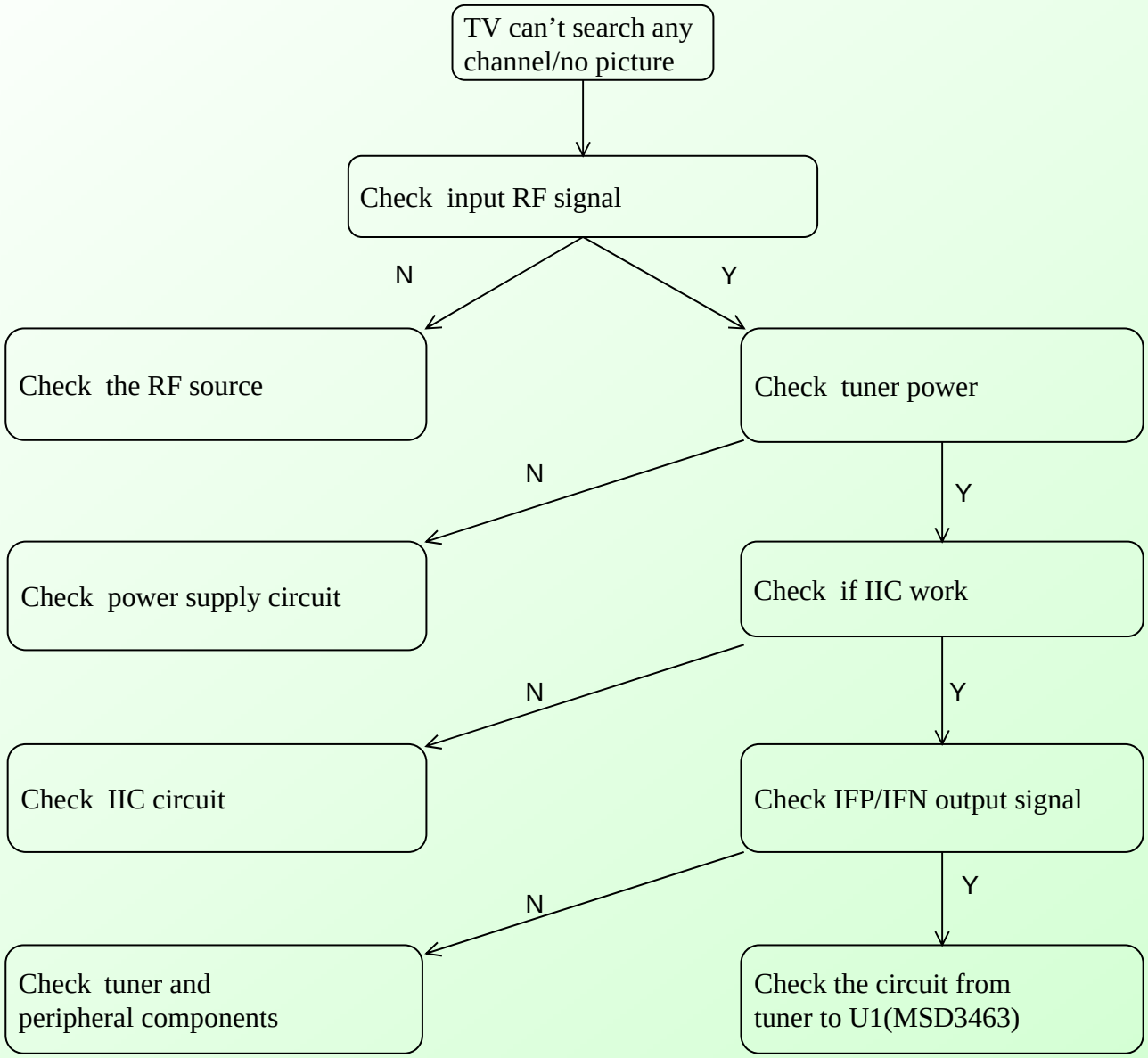

10. Function Trouble（PC）

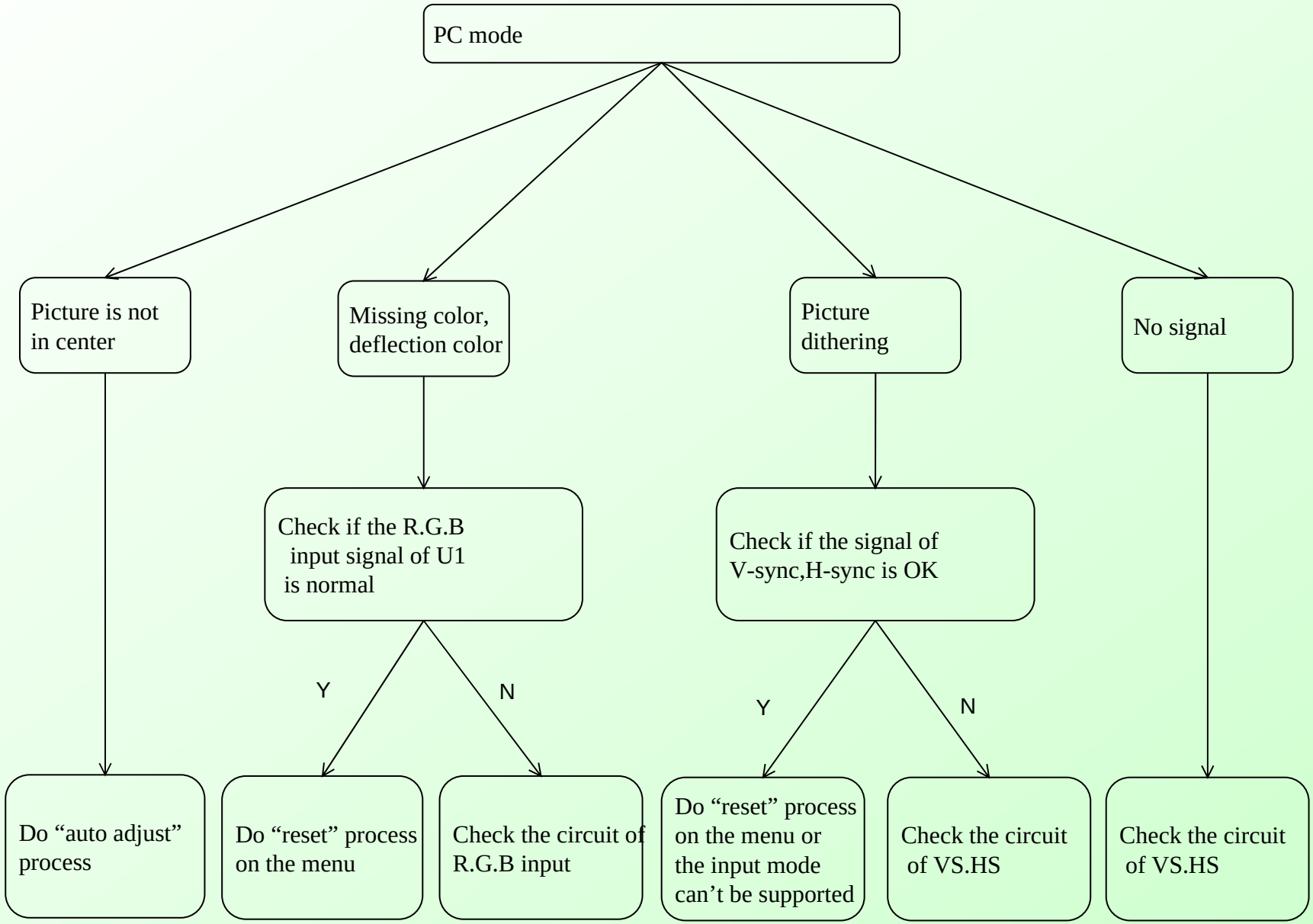

11. Function Trouble（HDMI、YPbPr、CVBS）

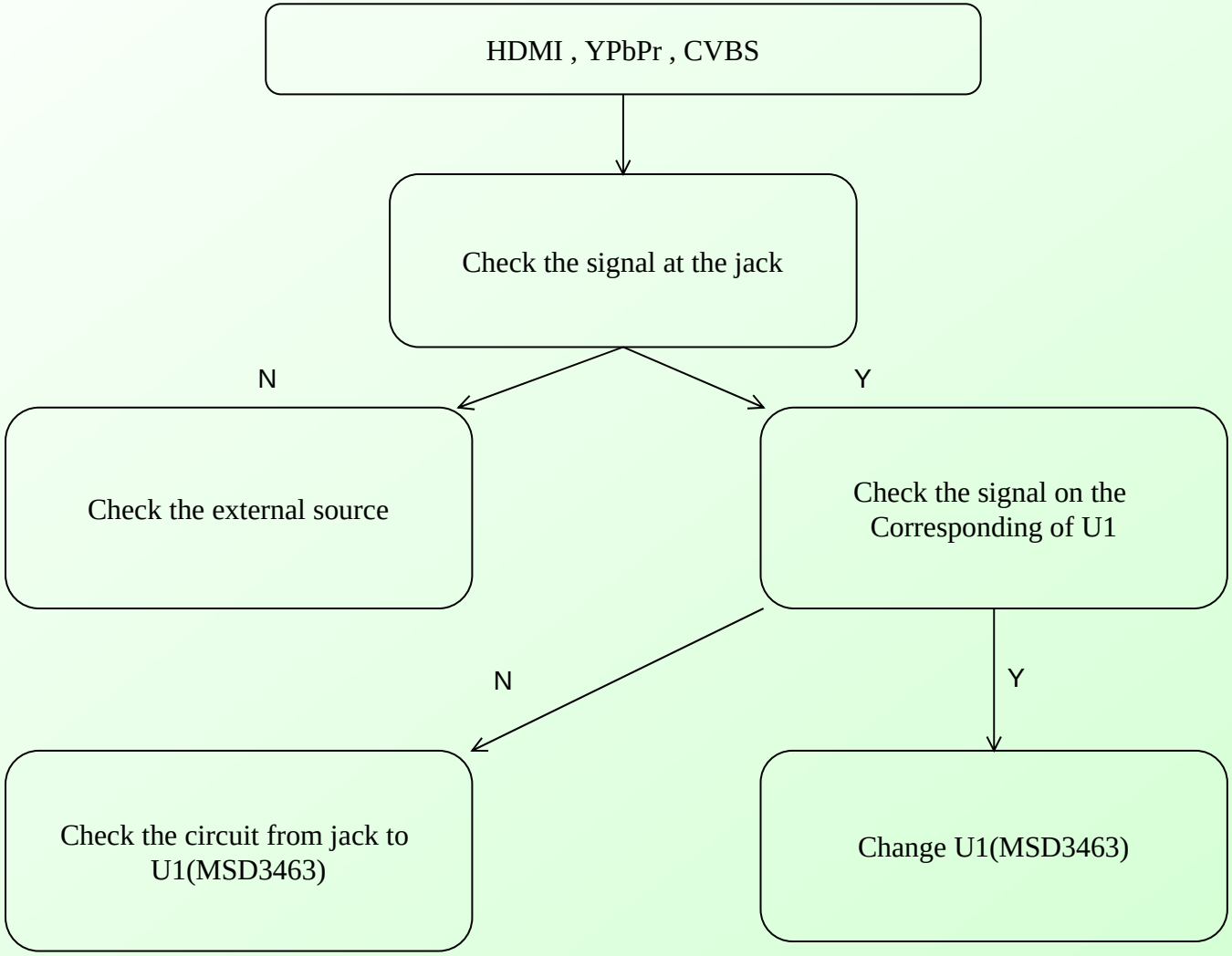

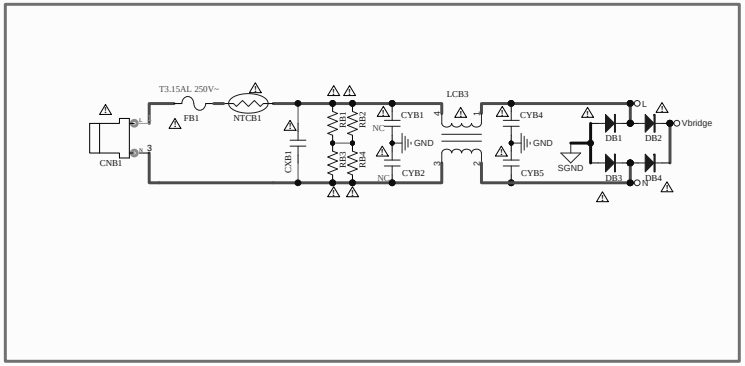

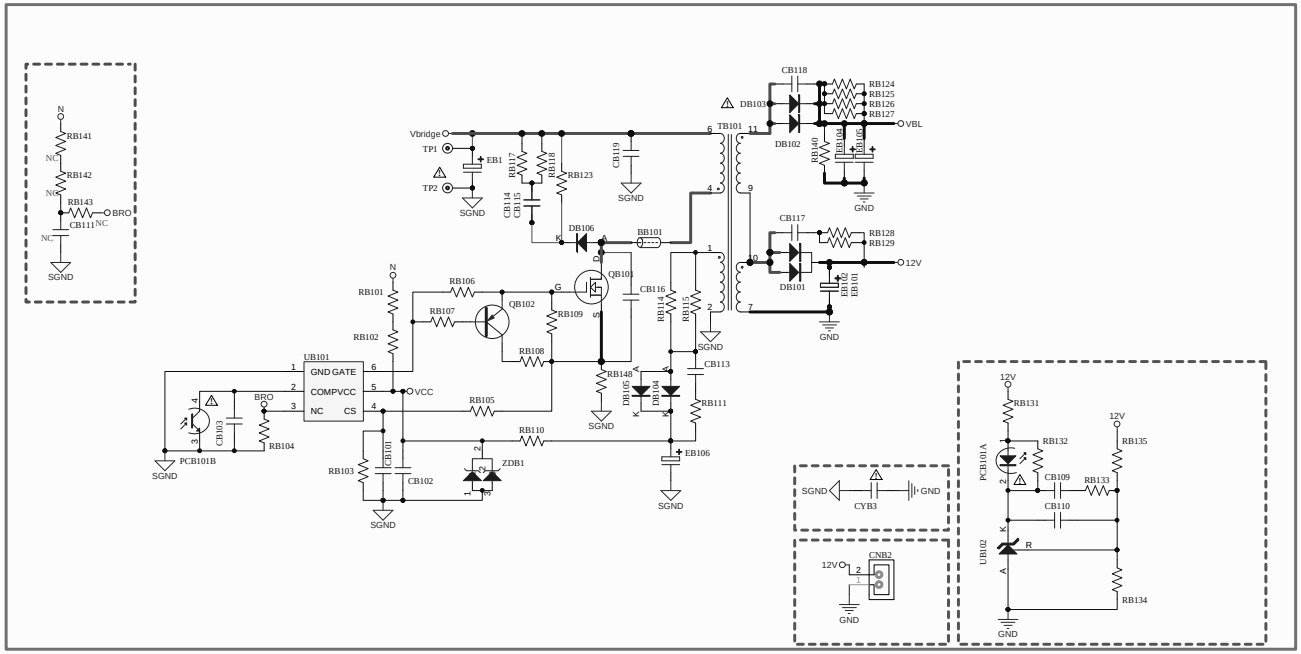

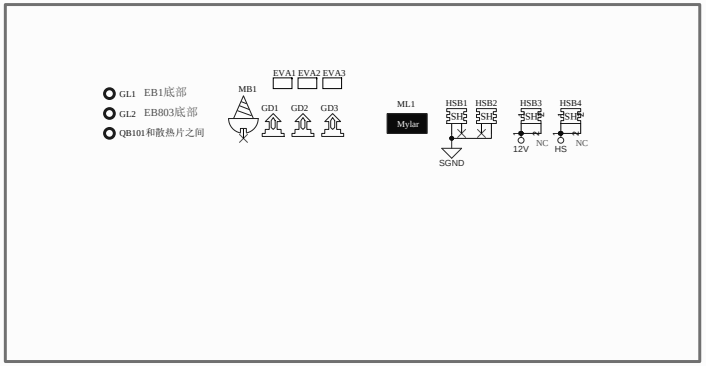

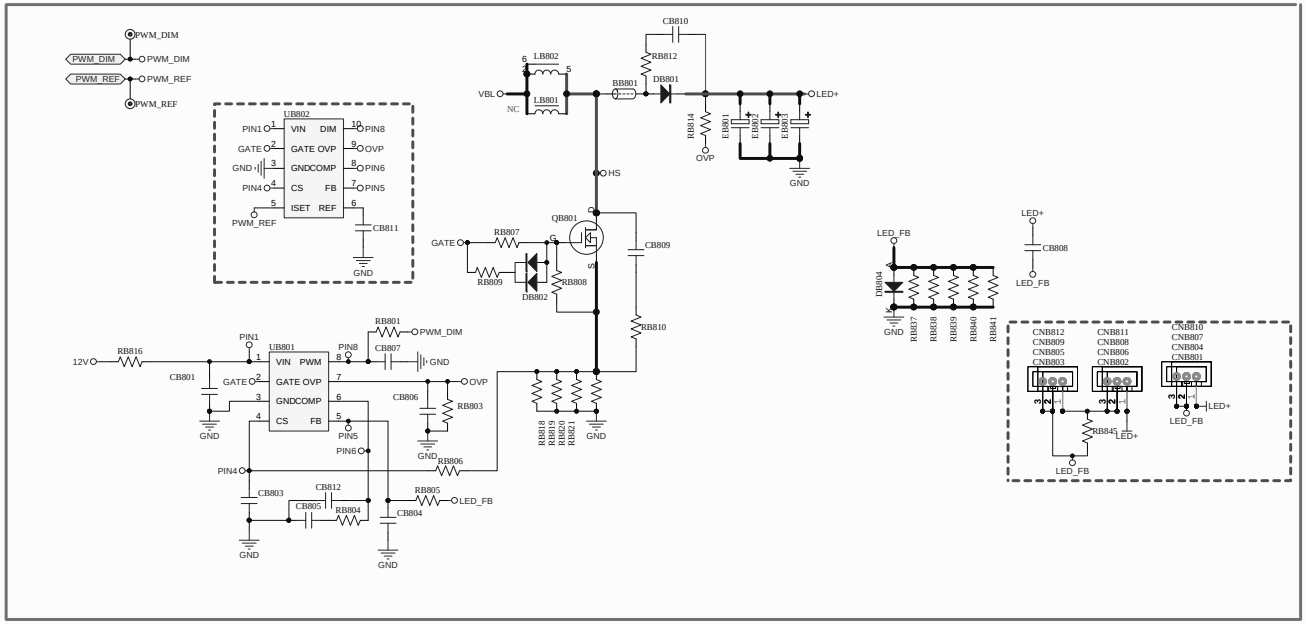

Model Name:	TP.MS3463S.PB801			VERSION:	V1.0
DRAWN:	hezhian	DATE:	2014-12-25	CVTE Dream-Future	
CHK'D:		DATE:	2014-12-25		

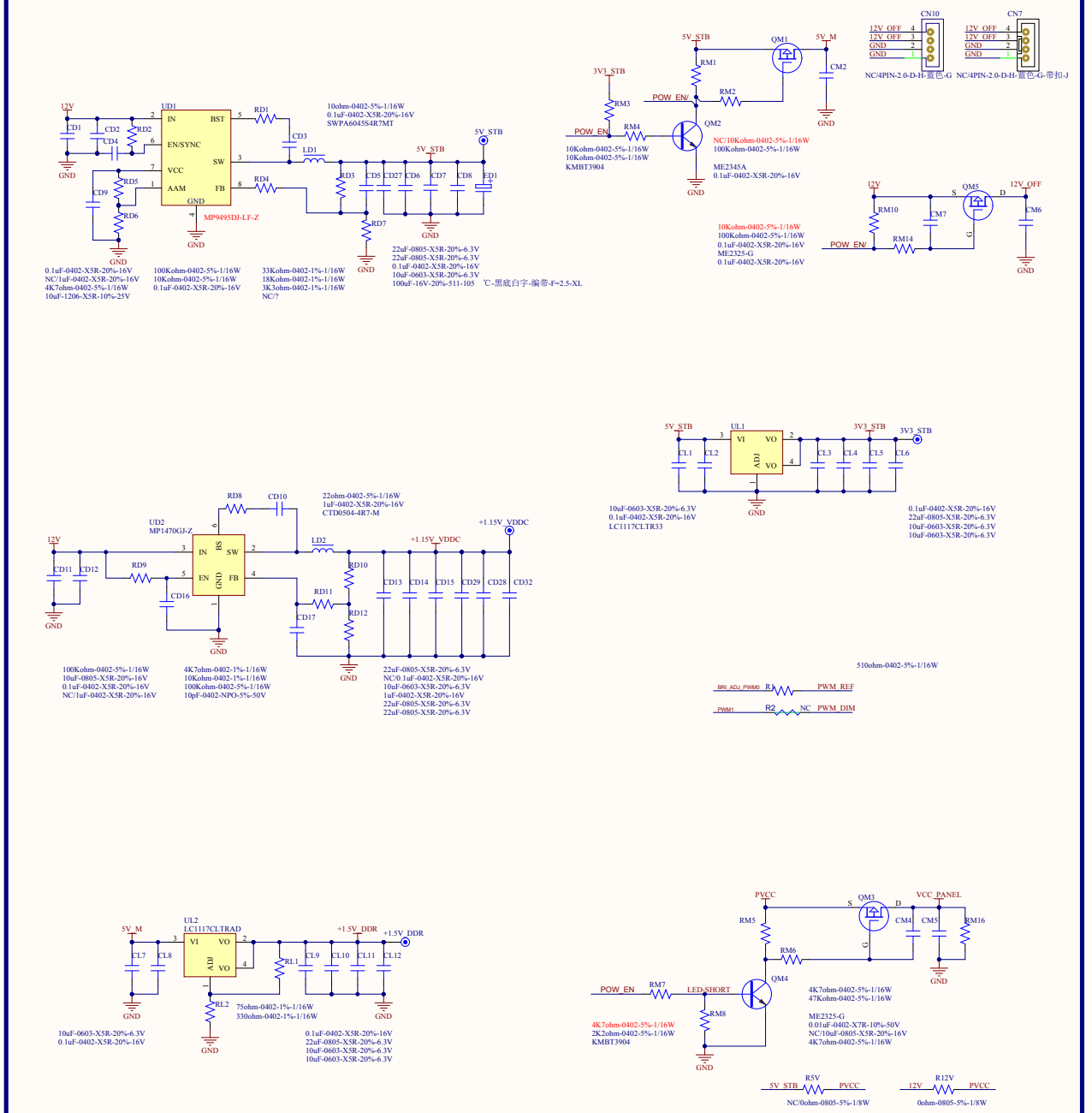
12V
UD1
IN
BST
EN/SYNC
SW
VCC
AAM
FB
GND
MP9495DJ-LF-Z
RD1
RD2
RD3
RD4
RD5
RD6
RD7
CD1
CD2
CD3
CD4
CD5
CD6
CD7
CD8
CD9
CD27
LD1
ED1
5V_STB
10ohm-0402-5%-1/16W
0.1uF-0402-X5R-20%-16V
SWPA6045S4R7MT
0.1uF-0402-X5R-20%-16V
NC/1uF-0402-X5R-20%-16V
4K7ohm-0402-5%-1/16W
10uF-1206-X5R-10%-25V
100Kohm-0402-5%-1/16W
10Kohm-0402-5%-1/16W
0.1uF-0402-X5R-20%-16V
33Kohm-0402-1%-1/16W
18Kohm-0402-1%-1/16W
3Kohm-0402-1%-1/16W
NC/?
22uF-0805-X5R-20%-6.3V
22uF-0805-X5R-20%-6.3V
0.1uF-0402-X5R-20%-16V
10uF-0603-X5R-20%-6.3V
100uF-16V-20%-511-105
℃-黑底白字-编带-F=2.5-XL
3V3_STB
RM3
RM4
POW_EN
10Kohm-0402-5%-1/16W
10Kohm-0402-5%-1/16W
KMBT3904
QM2
QM1
RM1
RM2
5V_M
CM2
NC/10Kohm-0402-5%-1/16W
100Kohm-0402-5%-1/16W
ME2345A
0.1uF-0402-X5R-20%-16V
CN10
CN7
12V_OFF
GND
NC/4PIN-2.0-D-H-蓝色-G
NC/4PIN-2.0-D-H-蓝色-G-带扣-J
QM5
RM10
RM14
CM7
CM6
10Kohm-0402-5%-1/16W
100Kohm-0402-5%-1/16W
0.1uF-0402-X5R-20%-16V
ME2325-G
0.1uF-0402-X5R-20%-16V
UD2
MP1470GJ-Z
HS
SW
EN
FB
RD8
RD9
RD10
RD11
RD12
CD10
CD11
CD12
CD13
CD14
CD15
CD16
CD17
CD29
CD28
CD32
LD2
+1.15V_VDDC
22ohm-0402-5%-1/16W
1uF-0402-X5R-20%-16V
CTD0504-4R7-M
100Kohm-0402-5%-1/16W
10uF-0805-X5R-20%-16V
0.1uF-0402-X5R-20%-16V
NC/1uF-0402-X5R-20%-16V
4K7ohm-0402-1%-1/16W
10Kohm-0402-1%-1/16W
100Kohm-0402-5%-1/16W
10pF-0402-NPO-5%-50V
22uF-0805-X5R-20%-6.3V
NC/0.1uF-0402-X5R-20%-16V
10uF-0603-X5R-20%-6.3V
1uF-0402-X5R-20%-16V
22uF-0805-X5R-20%-6.3V
22uF-0805-X5R-20%-6.3V
UL1
VI
VO
ADJ
CL1
CL2
CL3
CL4
CL5
CL6
3V3_STB
10uF-0603-X5R-20%-6.3V
0.1uF-0402-X5R-20%-16V
LC1117CLTR33
0.1uF-0402-X5R-20%-16V
22uF-0805-X5R-20%-6.3V
10uF-0603-X5R-20%-6.3V
10uF-0603-X5R-20%-6.3V
510ohm-0402-5%-1/16W
BRI_ADJ_PWM0
R1
PWM_REF
PWM1
R2
NC
PWM_DIM
UL2
LC1117CLTRAD
+1.5V_DDR
CL7
CL8
CL9
CL10
CL11
CL12
RL1
RL2
10uF-0603-X5R-20%-6.3V
0.1uF-0402-X5R-20%-16V
75ohm-0402-1%-1/16W
330ohm-0402-1%-1/16W
0.1uF-0402-X5R-20%-16V
22uF-0805-X5R-20%-6.3V
10uF-0603-X5R-20%-6.3V
10uF-0603-X5R-20%-6.3V
PVCC
QM3
VCC_PANEL
RM5
RM6
RM16
CM4
CM5
RM7
RM8
QM4
LED_SHORT
4K7ohm-0402-5%-1/16W
2K2ohm-0402-5%-1/16W
KMBT3904
4K7ohm-0402-5%-1/16W
47Kohm-0402-5%-1/16W
ME2325-G
0.01uF-0402-X7R-10%-50V
NC/10uF-0805-X5R-20%-16V
4K7ohm-0402-5%-1/16W
R5V
NC/0ohm-0805-5%-1/8W
R12V
0ohm-0805-5%-1/8W

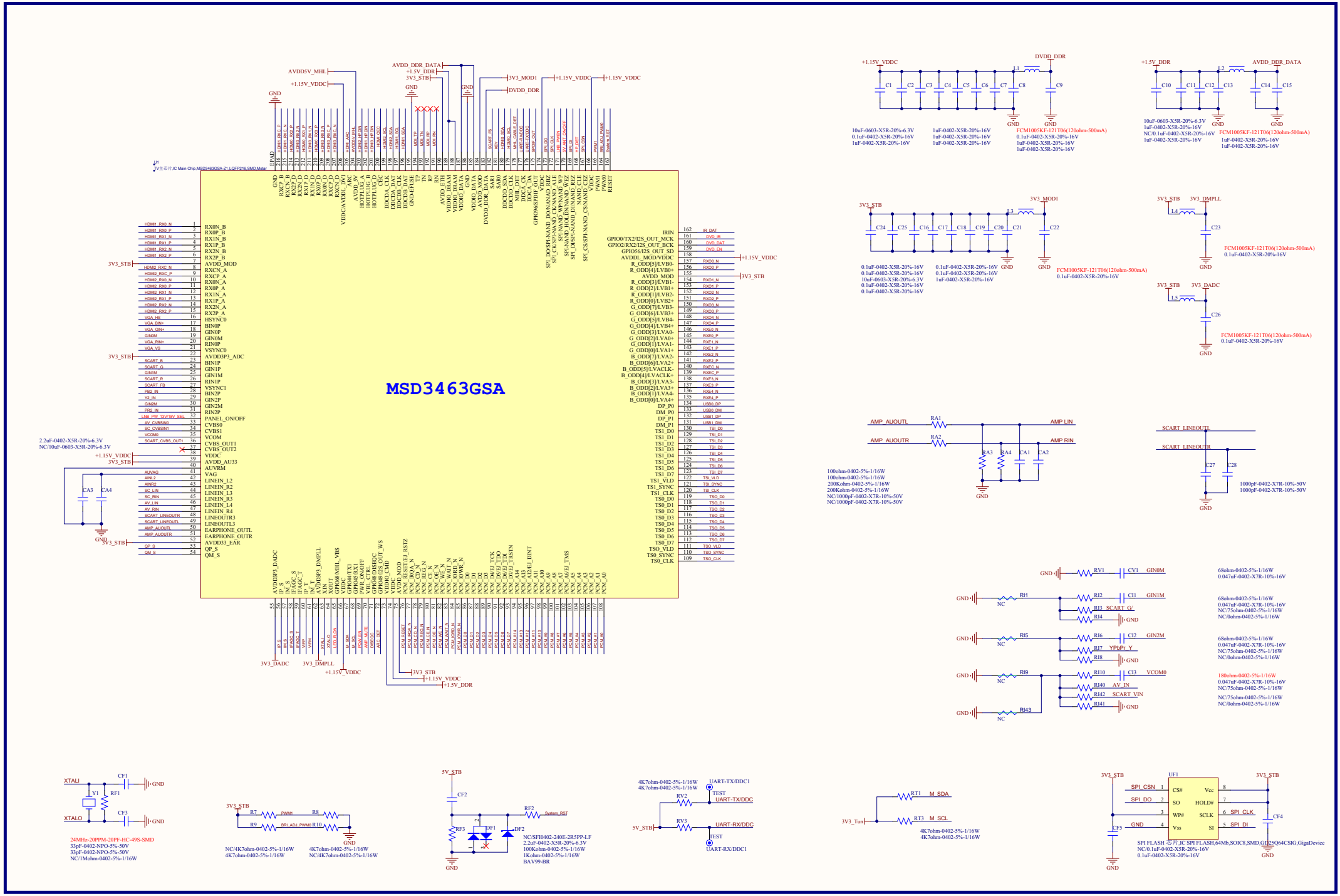
MSD3463GSA
+1.15V_VDDC
DVDD_DDR
C1 C2 C3 C4 C5 C6 C7 C8 C9
L1
GND
10uF-0603-X5R-20%-6.3V
0.1uF-0402-X5R-20%-16V
1uF-0402-X5R-20%-16V
FCM1005KF-121T06(120ohm-500mA)
+1.15V_DDR
AVDD_DDR_DATA
C10 C11 C12 C13 C14 C15
L2
10uF-0603-X5R-20%-6.3V
1uF-0402-X5R-20%-16V
NC/0.1uF-0402-X5R-20%-16V
FCM1005KF-121T06(120ohm-500mA)
3V3_STB
3V3_MOD1
C24 C25 C16 C17 C18 C19 C20 C21 C22
L3
0.1uF-0402-X5R-20%-16V
10uF-0603-X5R-20%-6.3V
FCM1005KF-121T06(120ohm-500mA)
3V3_DMPLL
L4
C23
FCM1005KF-121T06(120ohm-500mA)
0.1uF-0402-X5R-20%-16V
3V3_DADC
L5
C26
FCM1005KF-121T06(120ohm-500mA)
0.1uF-0402-X5R-20%-16V
AMP_AUOUTL
AMP_AUOUTR
RA1
RA2
RA3
RA4
CA1
CA2
AMP_LIN
AMP_RIN
100ohm-0402-5%-1/16W
100ohm-0402-5%-1/16W
200Kohm-0402-5%-1/16W
200Kohm-0402-5%-1/16W
NC/1000pF-0402-X7R-10%-50V
NC/1000pF-0402-X7R-10%-50V
SCART_LINEOUTL
SCART_LINEOUTR
C27 C28
1000pF-0402-X7R-10%-50V
1000pF-0402-X7R-10%-50V
RV1 CV1 GIN0M
68ohm-0402-5%-1/16W
0.047uF-0402-X7R-10%-16V
RI1 RI2 CI1 GIN1M
RI3 SCART_G/
RI4
68ohm-0402-5%-1/16W
0.047uF-0402-X7R-10%-16V
NC/75ohm-0402-5%-1/16W
NC/0ohm-0402-5%-1/16W
RI5 RI6 CI2 GIN2M
RI7 YPbPr_Y
RI8
68ohm-0402-5%-1/16W
0.047uF-0402-X7R-10%-16V
NC/75ohm-0402-5%-1/16W
NC/0ohm-0402-5%-1/16W
RI9 RI10 CI3 VCOM0
RI40 AV_IN
RI42 SCART_VIN
RI41
RI43
180ohm-0402-5%-1/16W
0.047uF-0402-X7R-10%-16V
NC/75ohm-0402-5%-1/16W
NC/75ohm-0402-5%-1/16W
NC/0ohm-0402-5%-1/16W
XTALI
XTALO
CF1 CF3
Y1
RF1
24MHz-20PPM-20PF-HC-49S-SMD
33pF-0402-NPO-5%-50V
33pF-0402-NPO-5%-50V
NC/1Mohm-0402-5%-1/16W
3V3_STB
R7 R8 R9 R10
PWM1
BRI_ADJ_PWM0
NC/4K7ohm-0402-5%-1/16W
4K7ohm-0402-5%-1/16W
4K7ohm-0402-5%-1/16W
NC/4K7ohm-0402-5%-1/16W
5V_STB
CF2
RF2
RF3
DF1
DF2
System_RST
NC/SFI0402-240E-2R5PP-LF
2.2uF-0402-X5R-20%-6.3V
100Kohm-0402-5%-1/16W
1Kohm-0402-5%-1/16W
BAV99-BR
4K7ohm-0402-5%-1/16W
4K7ohm-0402-5%-1/16W
UART-TX/DDC1
UART-TX/DDC
UART-RX/DDC
UART-RX/DDC1
RV2 RV3
TEST
3V3_Tun
RT1 M_SDA
RT3 M_SCL
4K7ohm-0402-5%-1/16W
4K7ohm-0402-5%-1/16W
UF1
SPI_CSN
SPI_DO
GND
CS# Vcc
SO HOLD#
WP# SCLK
Vss SI
SPI_CLK
SPI_DI
CF4 CF5
SPI FLASH 芯片,IC SPI FLASH,64Mb,SOIC8,SMD,GD25Q64CSIG,GigaDevice
NC/0.1uF-0402-X5R-20%-16V
0.1uF-0402-X5R-20%-16V

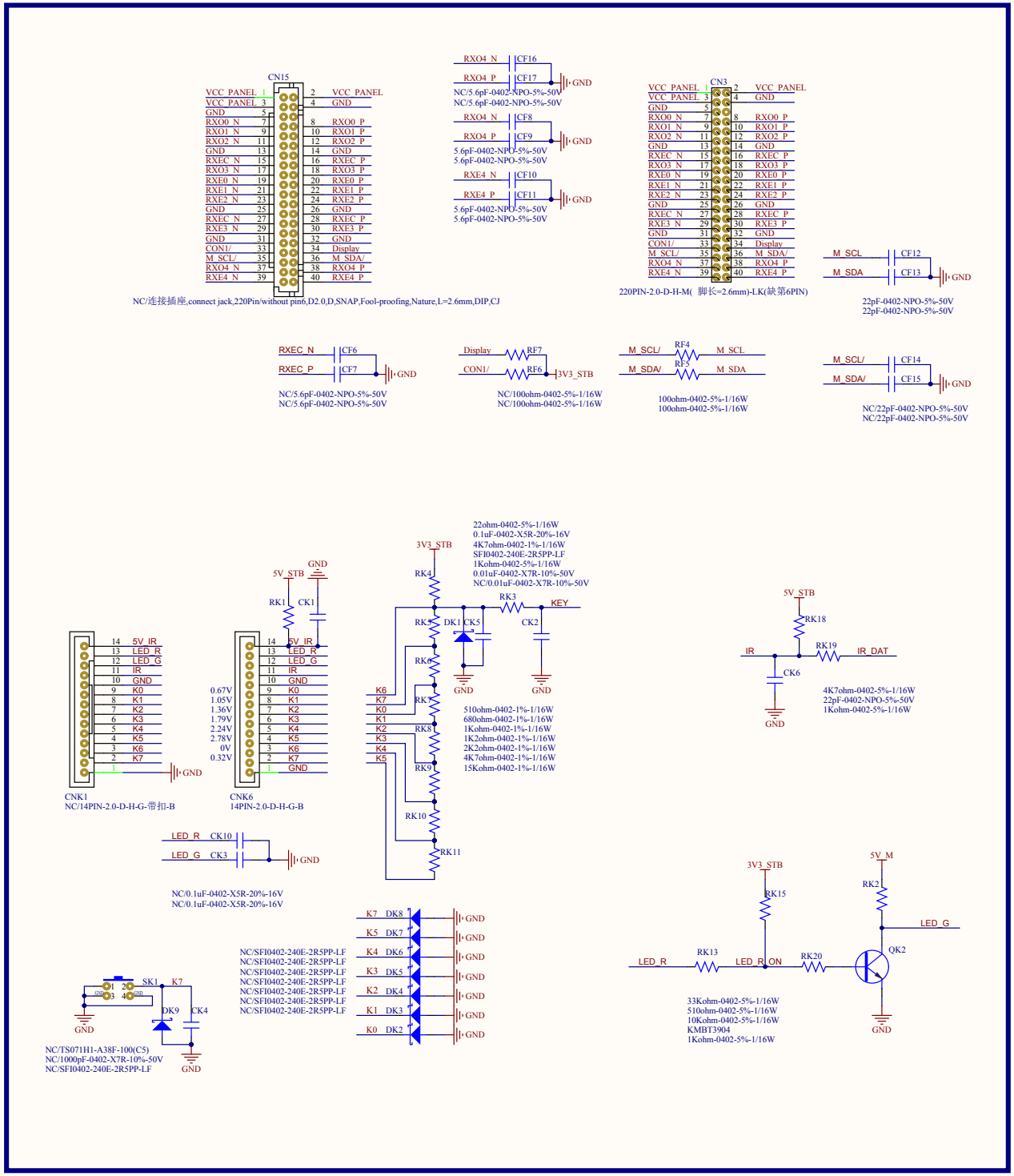
CN15
VCC_PANEL 1
VCC_PANEL 3
GND 5
RXO0_N 7
RXO1_N 9
RXO2_N 11
GND 13
RXEC_N 15
RXO3_N 17
RXE0_N 19
RXE1_N 21
RXE2_N 23
GND 25
RXEC_N 27
RXE3_N 29
GND 31
CON1/ 33
M_SCL/ 35
RXO4_N 37
RXE4_N 39
2 VCC_PANEL
4 GND
8 RXO0_P
10 RXO1_P
12 RXO2_P
14 GND
16 RXEC_P
18 RXO3_P
20 RXE0_P
22 RXE1_P
24 RXE2_P
26 GND
28 RXEC_P
30 RXE3_P
32 GND
34 Display
36 M_SDA/
38 RXO4_P
40 RXE4_P
NC/连接插座,connect jack,220Pin/without pin6,D2.0,D,SNAP,Fool-proofing,Nature,L=2.6mm,DIP,CJ
RXO4_N CF16
RXO4_P CF17
GND
NC/5.6pF-0402-NPO-5%-50V
NC/5.6pF-0402-NPO-5%-50V
RXO4_N CF8
RXO4_P CF9
GND
5.6pF-0402-NPO-5%-50V
5.6pF-0402-NPO-5%-50V
RXE4_N CF10
RXE4_P CF11
GND
5.6pF-0402-NPO-5%-50V
5.6pF-0402-NPO-5%-50V
CN3
VCC_PANEL 1
VCC_PANEL 3
GND 5
RXO0_N 7
RXO1_N 9
RXO2_N 11
GND 13
RXEC_N 15
RXO3_N 17
RXE0_N 19
RXE1_N 21
RXE2_N 23
GND 25
RXEC_N 27
RXE3_N 29
GND 31
CON1/ 33
M_SCL/ 35
RXO4_N 37
RXE4_N 39
2 VCC_PANEL
4 GND
8 RXO0_P
10 RXO1_P
12 RXO2_P
14 GND
16 RXEC_P
18 RXO3_P
20 RXE0_P
22 RXE1_P
24 RXE2_P
26 GND
28 RXEC_P
30 RXE3_P
32 GND
34 Display
36 M_SDA/
38 RXO4_P
40 RXE4_P
220PIN-2.0-D-H-M(脚长=2.6mm)-LK(缺第6PIN)
M_SCL CF12
M_SDA CF13
GND
22pF-0402-NPO-5%-50V
22pF-0402-NPO-5%-50V
RXEC_N CF6
RXEC_P CF7
GND
NC/5.6pF-0402-NPO-5%-50V
NC/5.6pF-0402-NPO-5%-50V
Display RF7
CON1/ RF6
3V3_STB
NC/100ohm-0402-5%-1/16W
NC/100ohm-0402-5%-1/16W
M_SCL/ RF4 M_SCL
M_SDA/ RF5 M_SDA
100ohm-0402-5%-1/16W
100ohm-0402-5%-1/16W
M_SCL/ CF14
M_SDA/ CF15
GND
NC/22pF-0402-NPO-5%-50V
NC/22pF-0402-NPO-5%-50V
CNK1
NC/14PIN-2.0-D-H-G-带扣-B
14 5V_IR
13 LED_R
12 LED_G
11 IR
10 GND
9 K0
8 K1
7 K2
6 K3
5 K4
4 K5
3 K6
2 K7
1 GND
CNK6
14PIN-2.0-D-H-G-B
0.67V 14 5V_IR
1.05V 13 LED_R
1.36V 12 LED_G
1.79V 11 IR
2.24V 10 GND
2.78V 9 K0
0V 8 K1
0.32V 7 K2
6 K3
5 K4
4 K5
3 K6
2 K7
1 GND
5V_STB
GND
RK1 CK1
3V3_STB
RK4
22ohm-0402-5%-1/16W
0.1uF-0402-X5R-20%-16V
4K7ohm-0402-1%-1/16W
SFI0402-240E-2R5PP-LF
1Kohm-0402-5%-1/16W
0.01uF-0402-X7R-10%-50V
NC/0.01uF-0402-X7R-10%-50V
RK3 KEY
RK5 DK1 CK5 CK2
GND GND
RK6
RK7
RK8
RK9
RK10
RK11
K6
K7
K0
K1
K2
K3
K4
K5
510ohm-0402-1%-1/16W
680ohm-0402-1%-1/16W
1Kohm-0402-1%-1/16W
1K2ohm-0402-1%-1/16W
2K2ohm-0402-1%-1/16W
4K7ohm-0402-1%-1/16W
15Kohm-0402-1%-1/16W
5V_STB
RK18
IR
RK19 IR_DAT
CK6
GND
4K7ohm-0402-5%-1/16W
22pF-0402-NPO-5%-50V
1Kohm-0402-5%-1/16W
LED_R CK10
LED_G CK3
GND
NC/0.1uF-0402-X5R-20%-16V
NC/0.1uF-0402-X5R-20%-16V
K7 DK8
K5 DK7
K4 DK6
K3 DK5
K2 DK4
K1 DK3
K0 DK2
GND
NC/SFI0402-240E-2R5PP-LF
NC/SFI0402-240E-2R5PP-LF
NC/SFI0402-240E-2R5PP-LF
NC/SFI0402-240E-2R5PP-LF
NC/SFI0402-240E-2R5PP-LF
NC/SFI0402-240E-2R5PP-LF
NC/SFI0402-240E-2R5PP-LF
SK1 K7
DK9 CK4
GND
GND
NC/TS071H1-A38F-100(C5)
NC/1000pF-0402-X7R-10%-50V
NC/SFI0402-240E-2R5PP-LF
3V3_STB
RK15
5V_M
RK2
LED_G
LED_R
RK13
LED_R_ON
RK20
QK2
GND
33Kohm-0402-5%-1/16W
510ohm-0402-5%-1/16W
10Kohm-0402-5%-1/16W
KMBT3904
1Kohm-0402-5%-1/16W

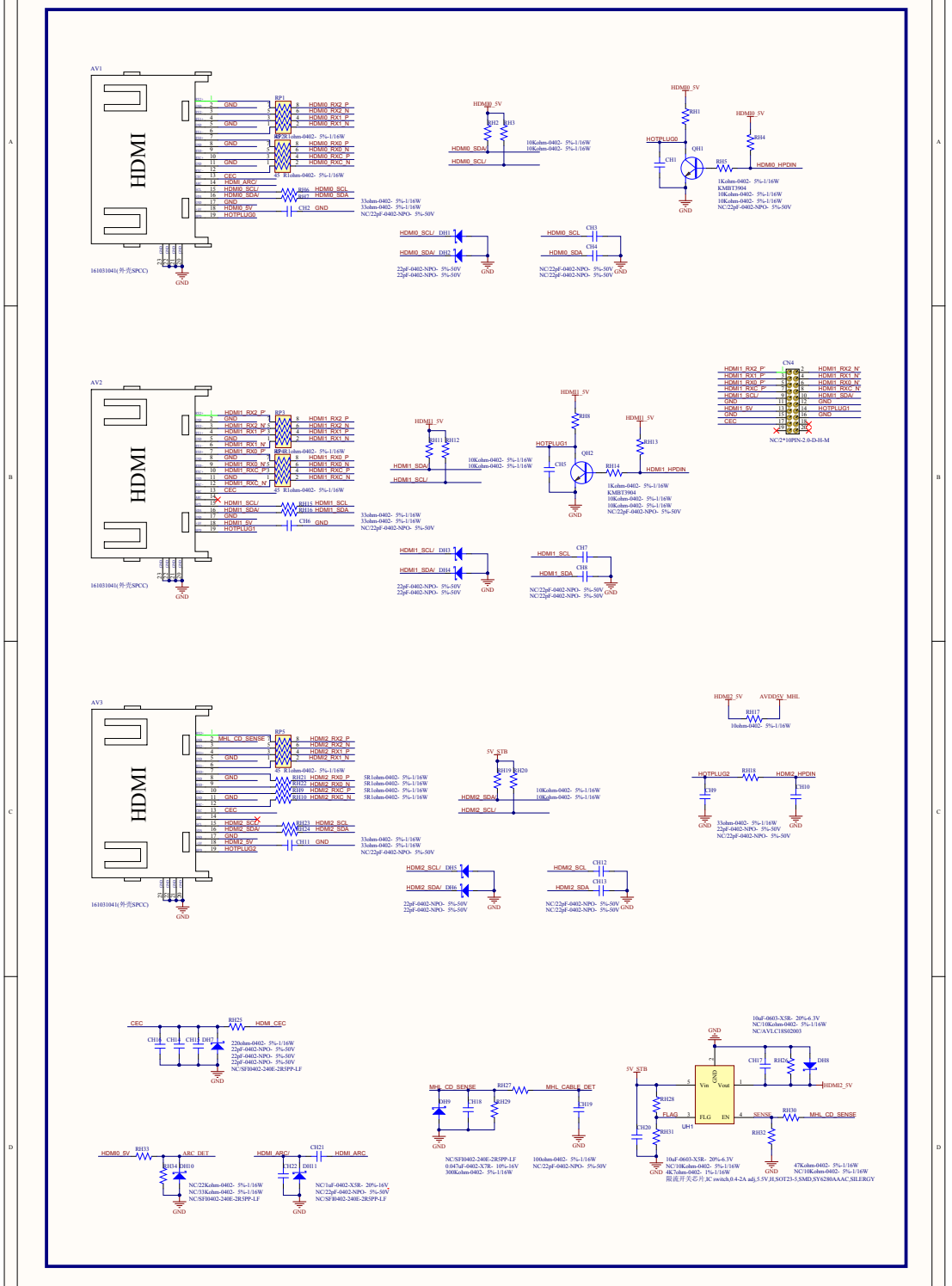
AV1
HDMI
16103104(外壳SPCC)
GND
RP1
RP3
RP5
HDMI0_RX2_P
HDMI0_RX2_N
HDMI0_RX1_P
HDMI0_RX1_N
HDMI0_RX0_P
HDMI0_RX0_N
HDMI0_RXC_P
HDMI0_RXC_N
CEC
HDMI_ARC/
HDMI0_SCL/
HDMI0_SDA/
HDMI0_5V
HOTPLUG0
RH6 HDMI0_SCL
RH7 HDMI0_SDA
CH2 GND
33ohm-0402- 5%-1/16W
NC/22pF-0402-NPO- 5%-50V
10Kohm-0402- 5%-1/16W
RH1
RH2
RH3
RH4
RH5
CH1
QH1
HDMI0_HPDIN
1Kohm-0402- 5%-1/16W
KMBT3904
AV2
HDMI1_RX2_P
HDMI1_RX2_N
HDMI1_RX1_P
HDMI1_RX1_N
HDMI1_RX0_P
HDMI1_RX0_N
HDMI1_RXC_P
HDMI1_RXC_N
CEC
HDMI1_SCL/
HDMI1_SDA/
HDMI1_5V
HOTPLUG1
RH15 HDMI1_SCL
RH16 HDMI1_SDA
CH6 GND
RH8
RH11
RH12
RH13
RH14
CH5
QH2
HDMI1_HPDIN
CN4
NC/24*1HPDC-2.8-D-H-M
AV3
MHL_CD_SENSE
HDMI2_RX2_P
HDMI2_RX2_N
HDMI2_RX1_P
HDMI2_RX1_N
HDMI2_RX0_P
HDMI2_RX0_N
HDMI2_RXC_P
HDMI2_RXC_N
HDMI2_SCL/
HDMI2_SDA/
HDMI2_5V
HOTPLUG2
RH23 HDMI2_SCL
RH24 HDMI2_SDA
CH11 GND
5R1ohm-0402- 5%-1/16W
5R1ohm-0402- 5%-1/16W
5R1ohm-0402- 5%-1/16W
5R1ohm-0402- 5%-1/16W
5V_STB
RH19
RH20
HDMI2_HPDIN
RH18
CH9
CH10
RH17
10ohm-0402- 5%-1/16W
AVDD5V_MHL
CEC
RH25
HDMI_CEC
CH14
CH15
CH16
DH7
220ohm-0402- 5%-1/16W
22pF-0402-NPO- 5%-50V
NC/SF00402-240E-2R5PP-LF
HDMI0_5V
RH33
ARC_DET
RH34
DH10
NC/22Kohm-0402- 5%-1/16W
NC/33Kohm-0402- 5%-1/16W
NC/SF00402-240E-2R5PP-LF
HDMI_ARC/
CH21
HDMI_ARC
CH22
DH11
NC/1uF-0402-X5R- 20%-16V
NC/22pF-0402-NPO- 5%-50V
MHL_CD_SENSE
RH27
MHL_CABLE_DET
CH19
CH18
RH29
NC/SF00402-240E-2R5PP-LF
0.047uF-0402-X7R- 10%-16V
300Kohm-0402- 5%-1/16W
100ohm-0402- 5%-1/16W
NC/22pF-0402-NPO- 5%-50V
5V_STB
Vin
Vout
FLG
EN
GND
UH1
CH17
RH26
DH8
HDMI2_5V
RH28
RH31
CH20
RH32
RH30
SENSE
10uF-0603-X5R- 20%-6.3V
NC/10Kohm-0402- 5%-1/16W
NC/AVLC18S02003
10uF-0603-X5R- 20%-6.3V
NC/10Kohm-0402- 5%-1/16W
47Kohm-0402- 5%-1/16W
NC/10Kohm-0402- 5%-1/16W
限流开关芯片,IC switch,0.4-2A adj,5.5V,H,SOT23-5,SMD,SY6280AAAC,SILERGY

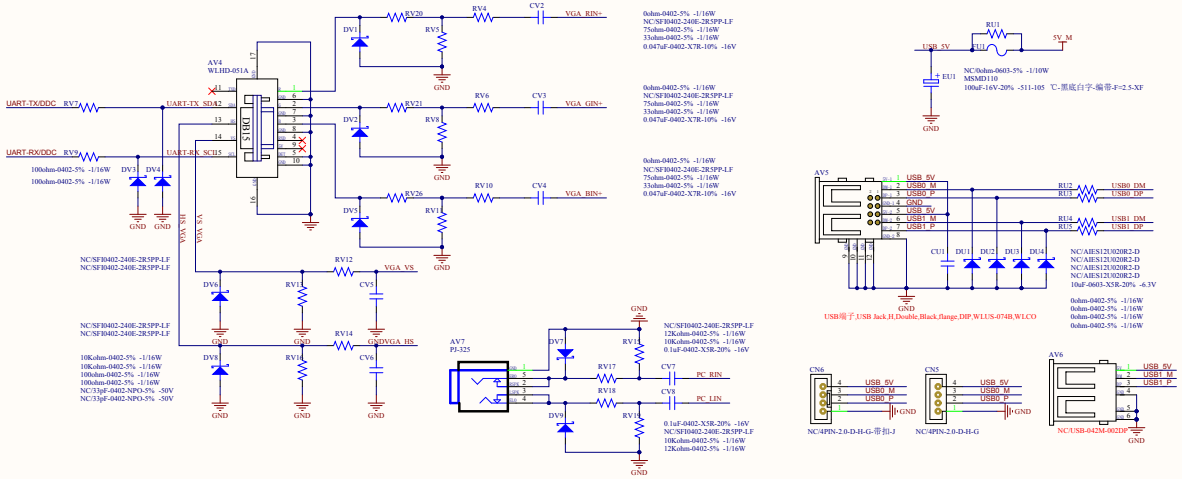
AV4
WLHD-051A
DB15
UART-TX_SDA2
UART-RX_SCL5
UART-TX_DDC_RV7
UART-RX/DDC_RV9
100ohm-0402-5% -1/16W
DV3
DV4
GND
VGA_SDI
VGA_SA
NC/SFI0402-240E-2R5PP-LF
NC/SFI0402-240E-2R5PP-LF
DV6
RV13
CV5
RV12
VGA_VS
RV14
CV6
VGA/HS
DV8
RV15
10Kohm-0402-5% -1/16W
10Kohm-0402-5% -1/16W
100ohm-0402-5% -1/16W
100ohm-0402-5% -1/16W
NC/33pF-0402-NPO-5% -50V
NC/33pF-0402-NPO-5% -50V
DV1
RV20
RV5
RV4
CV2
VGA_RIN+
0ohm-0402-5% -1/16W
NC/SFI0402-240E-2R5PP-LF
75ohm-0402-5% -1/16W
33ohm-0402-5% -1/16W
0.047uF-0402-X7R-10% -16V
DV2
RV21
RV8
RV6
CV3
VGA_GIN+
0ohm-0402-5% -1/16W
NC/SFI0402-240E-2R5PP-LF
75ohm-0402-5% -1/16W
33ohm-0402-5% -1/16W
0.047uF-0402-X7R-10% -16V
DV5
RV26
RV11
RV10
CV4
VGA_BIN+
0ohm-0402-5% -1/16W
NC/SFI0402-240E-2R5PP-LF
75ohm-0402-5% -1/16W
33ohm-0402-5% -1/16W
0.047uF-0402-X7R-10% -16V
AV7
PJ-325
DV7
RV16
NC/SFI0402-240E-2R5PP-LF
12Kohm-0402-5% -1/16W
10Kohm-0402-5% -1/16W
0.1uF-0402-X5R-20% -16V
RV17
CV7
PC_RIN
RV18
CV8
PC_LIN
DV9
RV19
0.1uF-0402-X5R-20% -16V
NC/SFI0402-240E-2R5PP-LF
10Kohm-0402-5% -1/16W
12Kohm-0402-5% -1/16W

RU1
USB_5V
EU1
5V_M
NC/0ohm-0603-5% -1/10W
MSMD110
100uF-16V-20% -511-105 ℃-黑底白字-编带-F=2.5-XF
AV5
USB_5V
USB0_M
USB0_P
GND
USB_5V
USB1_M
USB1_P
RU2
RU3
USB0_DM
USB0_DP
RU4
RU5
USB1_DM
USB1_DP
CU1
DU1
DU2
DU3
DU4
NC/AIES12U020R2-D
NC/AIES12U020R2-D
NC/AIES12U020R2-D
NC/AIES12U020R2-D
10uF-0603-X5R-20% -6.3V
USB端子,USB Jack,H,Double,Black,flange,DIP,WLUS-074B,WLCO
0ohm-0402-5% -1/16W
0ohm-0402-5% -1/16W
0ohm-0402-5% -1/16W
0ohm-0402-5% -1/16W
CN6
USB_5V
USB0_M
USB0_P
NC/4PIN-2.0-D-H-G-带扣-J
CN5
USB_5V
USB0_M
USB0_P
NC/4PIN-2.0-D-H-G
AV6
USB_5V
USB1_M
USB1_P
NC/USB-042M-002DP

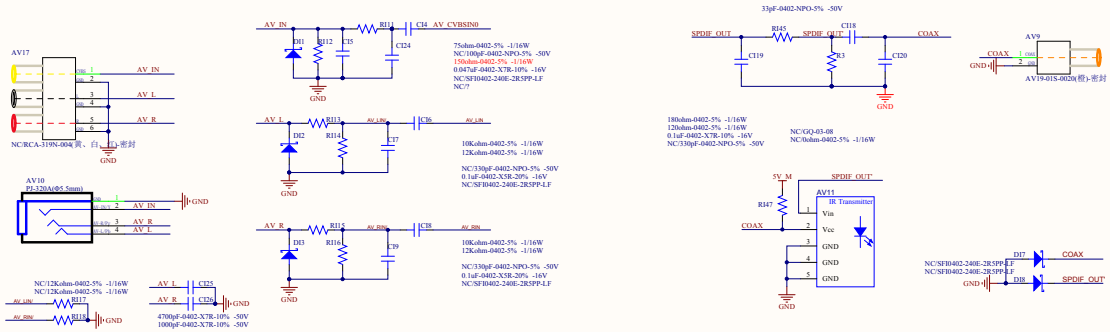
AV17
AV_IN
AV_L
AV_R
NC/RCA-319N-004黄、白、红-密封
GND
AV10
PJ-320A(Φ5.5mm)
AV_IN
AV_R
AV_L
GND
NC/12Kohm-0402-5% -1/16W
NC/12Kohm-0402-5% -1/16W
AV_LIN
AV_RIN
RI17
RI18
GND
AV_L
AV_R
CI25
CI26
GND
4700pF-0402-X7R-10% -50V
1000pF-0402-X7R-10% -50V
AV_IN
DI1
RI12
CI5
CI4_AV_CVBSIN0
CI24
75ohm-0402-5% -1/16W
NC/100pF-0402-NPO-5% -50V
150ohm-0402-5% -1/16W
0.047uF-0402-X7R-10% -16V
NC/SFI0402-240E-2R5PP-LF
NC/?
AV_L
DI2
RI13
RI14
CI7
AV_LIN
CI6
AV_LIN
10Kohm-0402-5% -1/16W
12Kohm-0402-5% -1/16W
NC/330pF-0402-NPO-5% -50V
0.1uF-0402-X5R-20% -16V
NC/SFI0402-240E-2R5PP-LF
AV_R
DI3
RI15
RI16
CI9
AV_RIN
CI8
AV_RIN
10Kohm-0402-5% -1/16W
12Kohm-0402-5% -1/16W
NC/330pF-0402-NPO-5% -50V
0.1uF-0402-X5R-20% -16V
NC/SFI0402-240E-2R5PP-LF
33pF-0402-NPO-5% -50V
SPDIF_OUT
RI45
SPDIF_OUT'
CI18
COAX
CI19
R3
CI20
GND
180ohm-0402-5% -1/16W
120ohm-0402-5% -1/16W
0.1uF-0402-X7R-10% -16V
NC/330pF-0402-NPO-5% -50V
NC/GQ-03-08
NC/0ohm-0402-5% -1/16W
AV9
COAX
GND
AV19-01S-002W橙-密封
5V_M
SPDIF_OUT'
RI47
COAX
AV11
IR Transmitter
Vin
Vcc
GND
GND
GND
GND
DI7
COAX
NC/SFI0402-240E-2R5PP-LF
NC/SFI0402-240E-2R5PP-LF
GND
DI8
SPDIF_OUT'

YPbPr Input

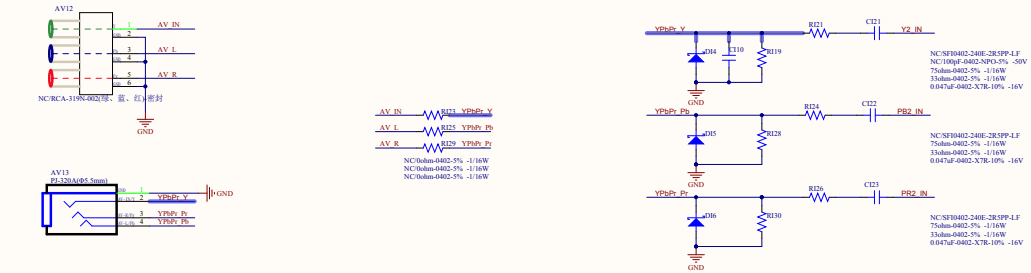
AV12
AV_IN
AV_L
AV_R
NC/RCA-319N-002绿、蓝、红-密封
GND
AV13
PJ-320A(Φ5.5mm)
YPbPr_Y
YPbPr_Pr
YPbPr_Pb
GND
AV_IN
RI23_YPbPr_Y
AV_L
RI25_YPbPr_Pb
AV_R
RI29_YPbPr_Pr
NC/0ohm-0402-5% -1/16W
NC/0ohm-0402-5% -1/16W
NC/0ohm-0402-5% -1/16W
YPbPr_Y
RI21
CI21
Y2_IN
DI4
CI10
RI19
NC/SFI0402-240E-2R5PP-LF
NC/100pF-0402-NPO-5% -50V
75ohm-0402-5% -1/16W
33ohm-0402-5% -1/16W
0.047uF-0402-X7R-10% -16V
GND
YPbPr_Pb
RI24
CI22
PR2_IN
DI5
RI28
NC/SFI0402-240E-2R5PP-LF
75ohm-0402-5% -1/16W
33ohm-0402-5% -1/16W
0.047uF-0402-X7R-10% -16V
GND
YPbPr_Pr
RI26
CI23
PR2_IN
DI6
RI30
NC/SFI0402-240E-2R5PP-LF
75ohm-0402-5% -1/16W
33ohm-0402-5% -1/16W
0.047uF-0402-X7R-10% -16V
GND

SCART Input

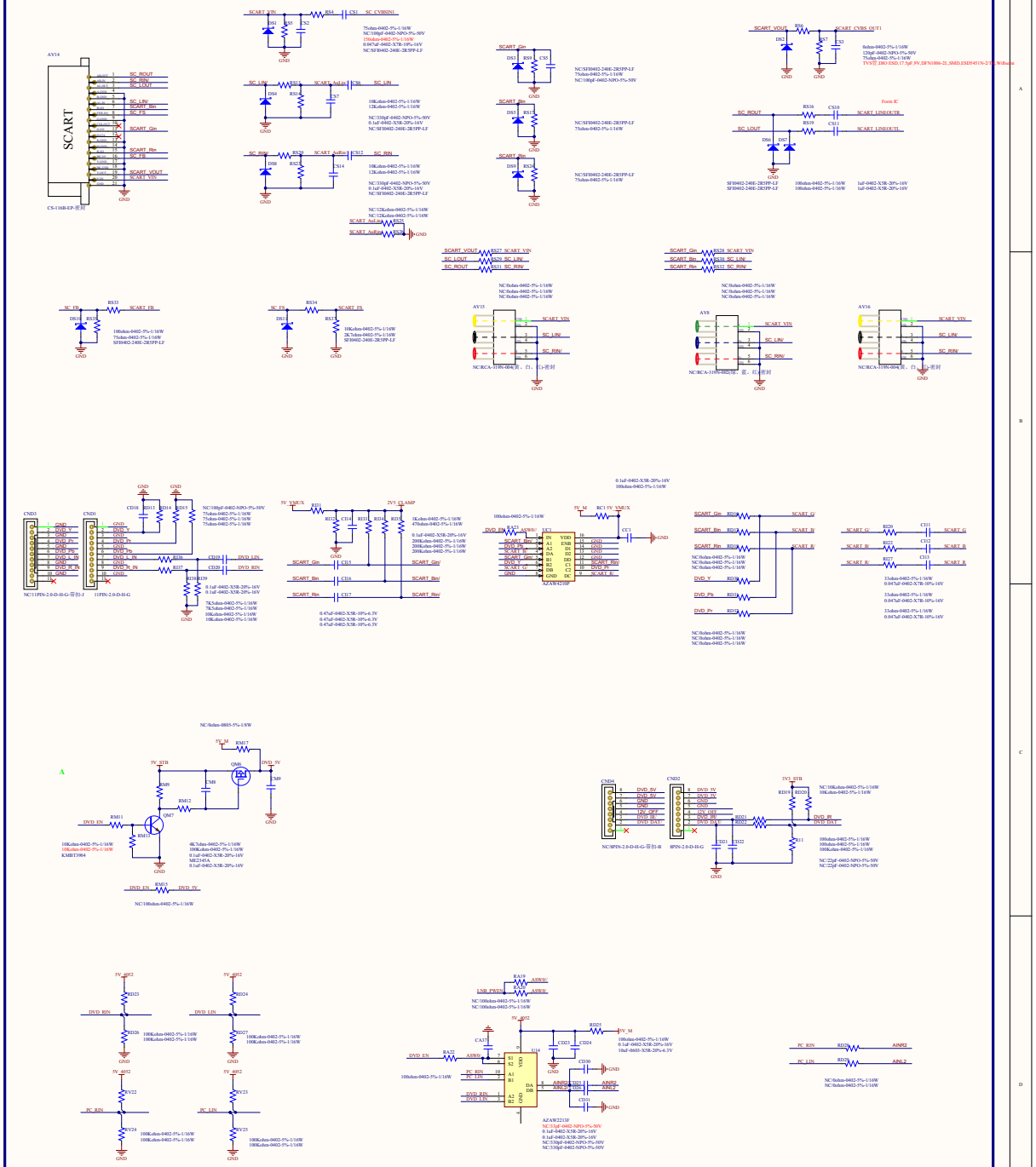
SCART
AV14
CS-116B-EF-密封
SC_ROUT
SC_RIN/
SC_LOUT
SC_LIN/
SCART_Bin
SC_FS
SCART_Gin
SCART_Rin
SC_FB
SCART_VOUT
SCART_VIN
SCART_VIN
SC_LIN/
SC_RIN/
SCART_Gin
SCART_Bin
SCART_Rin
SCART_VOUT
SC_LOUT
SC_ROUT
SCART_LINEOUTR
SCART_LINEOUTL
Form IC
SCART_G/
SCART_B/
SCART_R/
SCART_G
SCART_B
SCART_R
CND3
CND1
CND2
NC:11PIN-2.0-D-H-G-带扣-J
11PIN-2.0-D-H-G
NC:8PIN-2.0-D-H-G-带扣-B
8PIN-2.0-D-H-G
5V_STB
DVD_5V
DVD_EN
DVD_LIN
DVD_RIN
DVD_IR
DVD_DET
PC_RIN
PC_LIN
AIN#2
AIN1_2
LNB_PWIN
AZAW2215F
KMBT3904
ME2345A
GND

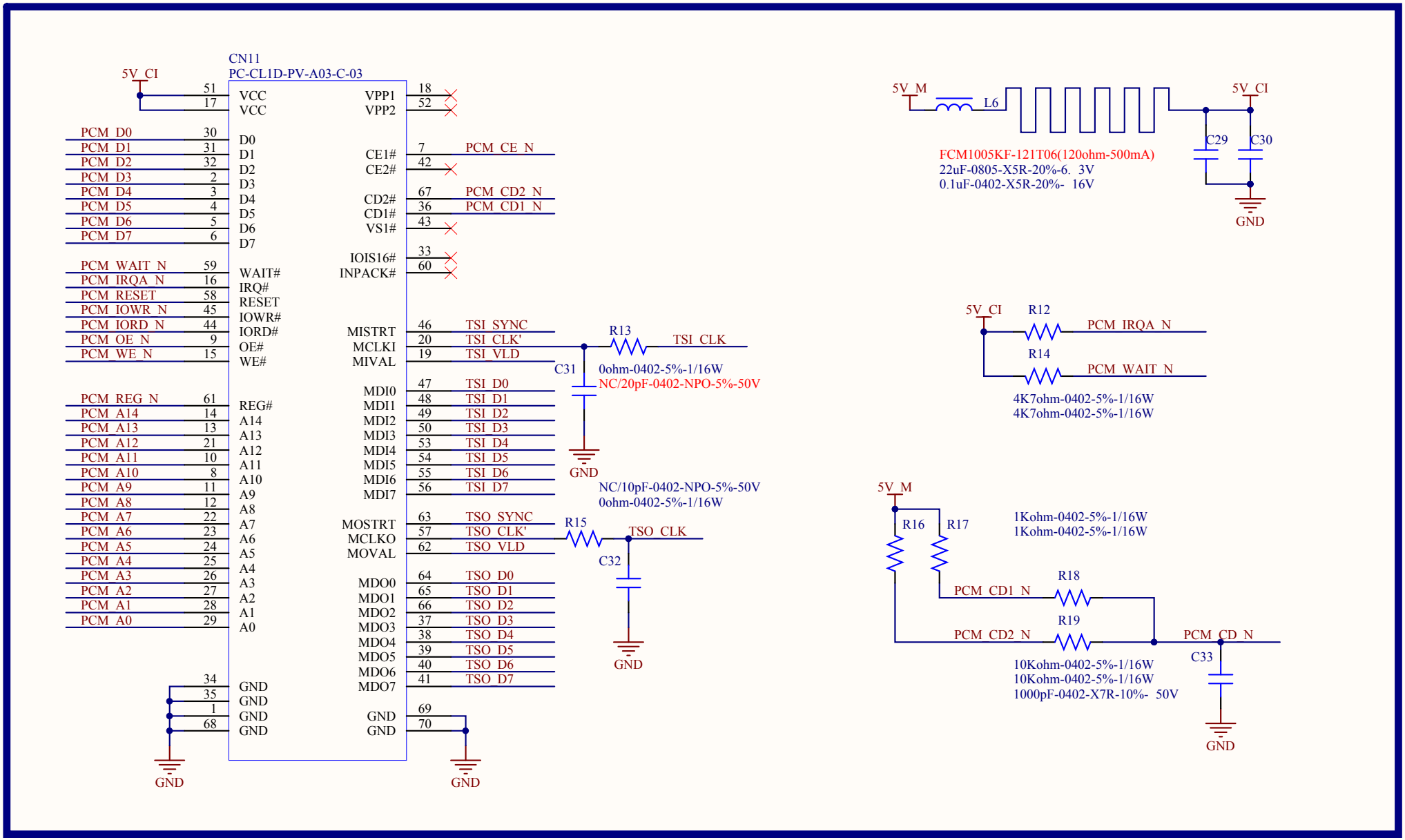
CN11
PC-CL1D-PV-A03-C-03
5V_CI
51 VCC
17 VCC
PCM_D0 30 D0
PCM_D1 31 D1
PCM_D2 32 D2
PCM_D3 2 D3
PCM_D4 3 D4
PCM_D5 4 D5
PCM_D6 5 D6
PCM_D7 6 D7
PCM_WAIT_N 59 WAIT#
PCM_IRQA_N 16 IRQ#
PCM_RESET 58 RESET
PCM_IOWR_N 45 IOWR#
PCM_IORD_N 44 IORD#
PCM_OE_N 9 OE#
PCM_WE_N 15 WE#
PCM_REG_N 61 REG#
PCM_A14 14 A14
PCM_A13 13 A13
PCM_A12 21 A12
PCM_A11 10 A11
PCM_A10 8 A10
PCM_A9 11 A9
PCM_A8 12 A8
PCM_A7 22 A7
PCM_A6 23 A6
PCM_A5 24 A5
PCM_A4 25 A4
PCM_A3 26 A3
PCM_A2 27 A2
PCM_A1 28 A1
PCM_A0 29 A0
34 GND
35 GND
1 GND
68 GND
GND
VPP1 18
VPP2 52
CE1# 7 PCM_CE_N
CE2# 42
CD2# 67 PCM_CD2_N
CD1# 36 PCM_CD1_N
VS1# 43
IOIS16# 33
INPACK# 60
MISTRT 46 TSI_SYNC
MCLKI 20 TSI_CLK'
MIVAL 19 TSI_VLD
MDI0 47 TSI_D0
MDI1 48 TSI_D1
MDI2 49 TSI_D2
MDI3 50 TSI_D3
MDI4 53 TSI_D4
MDI5 54 TSI_D5
MDI6 55 TSI_D6
MDI7 56 TSI_D7
MOSTRT 63 TSO_SYNC
MCLKO 57 TSO_CLK'
MOVAL 62 TSO_VLD
MDO0 64 TSO_D0
MDO1 65 TSO_D1
MDO2 66 TSO_D2
MDO3 37 TSO_D3
MDO4 38 TSO_D4
MDO5 39 TSO_D5
MDO6 40 TSO_D6
MDO7 41 TSO_D7
GND 69
GND 70
GND
R13
TSI_CLK
C31
0ohm-0402-5%-1/16W
NC/20pF-0402-NPO-5%-50V
GND
NC/10pF-0402-NPO-5%-50V
0ohm-0402-5%-1/16W
R15
TSO_CLK
C32
GND
5V_M
L6
5V_CI
C29
C30
FCM1005KF-121T06(120ohm-500mA)
22uF-0805-X5R-20%-6. 3V
0.1uF-0402-X5R-20%- 16V
GND
5V_CI
R12
PCM_IRQA_N
R14
PCM_WAIT_N
4K7ohm-0402-5%-1/16W
4K7ohm-0402-5%-1/16W
5V_M
R16
R17
1Kohm-0402-5%-1/16W
1Kohm-0402-5%-1/16W
PCM_CD1_N
R18
PCM_CD2_N
R19
PCM_CD_N
C33
10Kohm-0402-5%-1/16W
10Kohm-0402-5%-1/16W
1000pF-0402-X7R-10%- 50V
GND

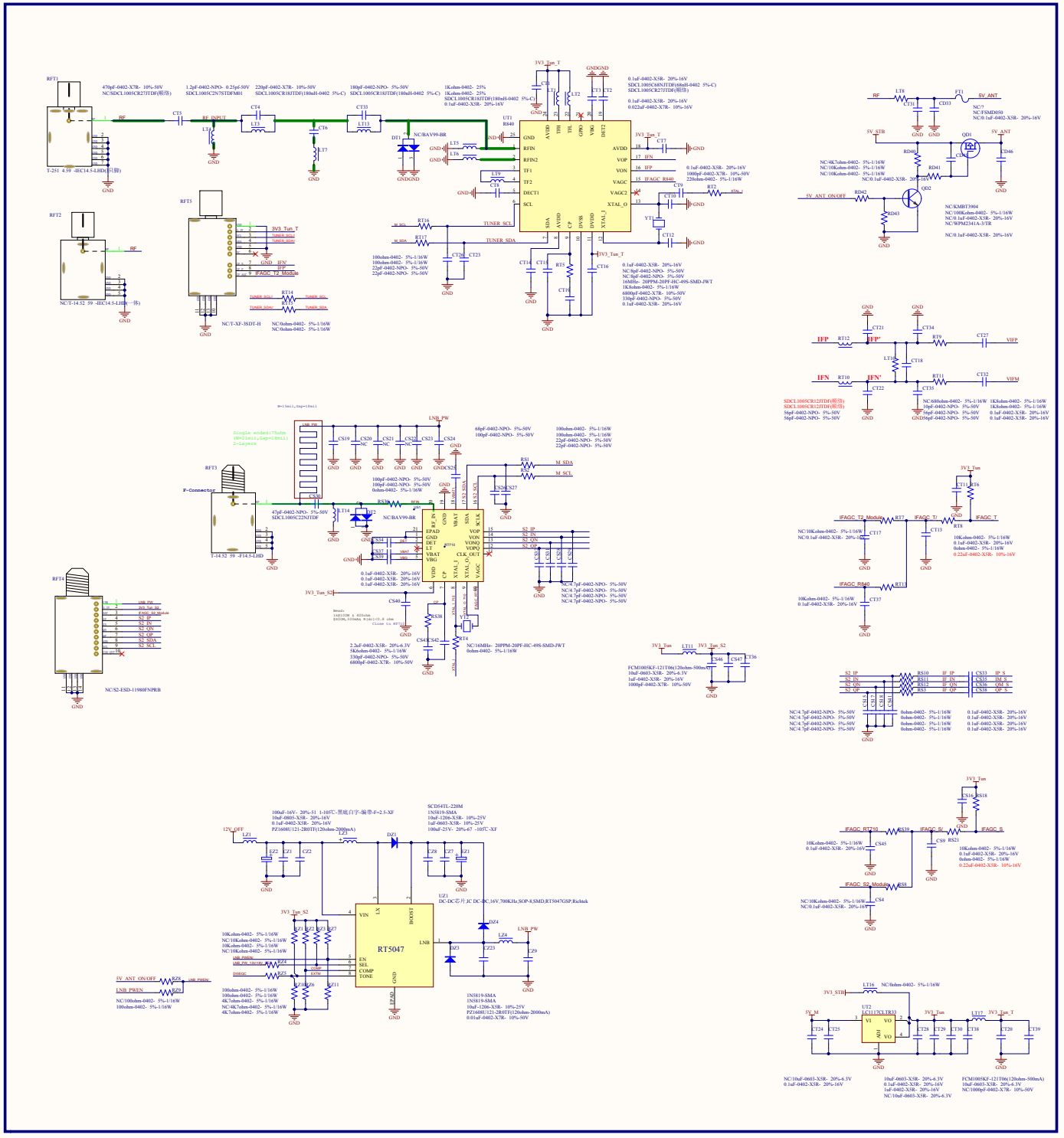
RFT1
470pF-0402-X7R- 10%-50V
NC:SDCL1005CR275JTDF(顺络)
1.2pF-0402-NPO- 0.25pf-50V
SDCL1005C2N75TDFM01
220pF-0402-X7R- 10%-50V
SDCL1005CR18JTDF(180mH-0402 5%-C)
180pF-0402-NPO- 5%-50V
SDCL1005CR18JTDF(180mH-0402 5%-C)
1Kohm-0402- 25%
1Kohm-0402- 25%
SDCL1005CR18JTDF(180mH-0402 5%-C)
0.1uF-0402-X5R- 20%-16V
T-251 4.59 -IEC14.5-LHD(只用)
RF_INPUT
NC:BAV99-BR
UT1
R540
AVDD
GND
RFIN
RFIN2
TF1
TF2
DECT1
SCL
SDA
AVDD
CP
DVSS
DVDD
XTAL_I
XTAL_O
VAGC2
VAGC
VON
VOP
IFN
IFP
DECT2
VDG
GPIO
TEL
TIH
3V3_Tun_T
GNDGND
0.1uF-0402-X5R- 20%-16V
SDCL1005C680JTDF(68mH-0402 5%-C)
SDCL1005CR27JTDF(顺络)
0.1uF-0402-X5R- 20%-16V
0.022uF-0402-X7R- 10%-16V
0.1uF-0402-X5R- 20%-16V
1000pF-0402-X7R- 10%-50V
220ohm-0402- 5%-1/16W
IFAGC_R540
XTAL_I
XTAL_O
TUNER_SCL
TUNER_SDA
M_SCL
M_SDA
100ohm-0402- 5%-1/16W
100ohm-0402- 5%-1/16W
22pF-0402-NPO- 5%-50V
22pF-0402-NPO- 5%-50V
0.1uF-0402-X5R- 20%-16V
NC:8pF-0402-NPO- 5%-50V
NC:8pF-0402-NPO- 5%-50V
16MHz- 20PPM-20PF-HC-49S-SMD-JWT
1Kohm-0402- 5%-1/16W
6800pF-0402-X7R- 10%-50V
330pF-0402-NPO- 5%-50V
0.1uF-0402-X5R- 20%-16V
RFT2
NC/T-14.52 59 -IEC14.5-LHD(一体)
RFT5
3V3_Tun_T
TUNER_SCL
TUNER_SDA
GND
IFN'
IFP'
IFAGC_T2_Module
NC/T-XF-3SDT-H
NC:0ohm-0402- 5%-1/16W
NC:0ohm-0402- 5%-1/16W
5V_ANT
RF
LT8
CT31
CD33
FT1
NC/?
NC/FSMD050
NC:0.1uF-0402-X5R- 20%-16V
5V_STB
QD1
CD46
NC:4K7ohm-0402- 5%-1/16W
NC:10Kohm-0402- 5%-1/16W
NC:10Kohm-0402- 5%-1/16W
NC:0.1uF-0402-X5R- 20%-16V
5V_ANT_ON/OFF
QO2
NC/KMBT3904
NC:100Kohm-0402- 5%-1/16W
NC:0.1uF-0402-X5R- 20%-16V
NC/WPM2341A-3/TR
NC:0.1uF-0402-X5R- 20%-16V
IFP
IFP'
VIFP
IFN
IFN'
VIFM
SDCL1005CR12JTDF(顺络)
SDCL1005CR12JTDF(顺络)
56pF-0402-NPO- 5%-50V
56pF-0402-NPO- 5%-50V
NC:680ohm-0402- 5%-1/16W
10pF-0402-NPO- 5%-50V
56pF-0402-NPO- 5%-50V
56pF-0402-NPO- 5%-50V
1Kohm-0402- 5%-1/16W
1Kohm-0402- 5%-1/16W
0.1uF-0402-X5R- 20%-16V
0.1uF-0402-X5R- 20%-16V
m=1mil,Sep=8mil
Single ended:75ohm
(W=21mil,Gap=18mil)
2-layers
RFT3
P-Connector
T-14.52 59 -F14.5-LHD
LNB_PW
47pF-0402-NPO- 5%-50V
SDC1106SC22NJTDF
NC:BAV99-BR
68pF-0402-NPO- 5%-50V
100pF-0402-NPO- 5%-50V
100pF-0402-NPO- 5%-50V
0ohm-0402- 5%-1/16W
M_SDA
M_SCL
EPAD
GND
DET
LT
VBAT
VBG
RF_IN
GND
VBAT
SDA
SCLK
VOP
VON
VONQ
VOPQ
CLK_OUT
VDD
CP
XTAL_I
XTAL_O
VAGC
S2_IP
S2_IN
S2_QN
S2_QP
0.1uF-0402-X5R- 20%-16V
0.1uF-0402-X5R- 20%-16V
0.1uF-0402-X5R- 20%-16V
NC:4.7pF-0402-NPO- 5%-50V
NC:4.7pF-0402-NPO- 5%-50V
NC:4.7pF-0402-NPO- 5%-50V
NC:4.7pF-0402-NPO- 5%-50V
3V3_Tun_S2
Bead:
1uH10M L 600ohm
@600M,300mA R:0±(-0.8 ohm
Close to RFT3
2.2uF-0402-X5R- 20%-6.3V
5Kohm-0402- 5%-1/16W
33pF-0402-NPO- 5%-50V
6800pF-0402-X7R- 10%-50V
NC:16MHz- 20PPM-20PF-HC-49S-SMD-JWT
0ohm-0402- 5%-1/16W
RFT4
NC/S2-ESD-11980FNPRB
3V3_Tun
LT11
3V3_Tun_S2
FCM1005KF-121T06(120ohm-500mA)
10uF-0603-X5R- 20%-6.3V
1uF-0402-X5R- 20%-16V
1000pF-0402-X7R- 10%-50V
3V3_Tun
CT11
RT6
IFAGC_T2_Module
RT7
IFAGC_T
CT13
RT8
NC:10Kohm-0402- 5%-1/16W
NC:0.1uF-0402-X5R- 20%-16V
10Kohm-0402- 5%-1/16W
0.1uF-0402-X5R- 20%-16V
0ohm-0402- 5%-1/16W
0.22uF-0402-X5R- 10%-16V
IFAGC_R540
RT13
10Kohm-0402- 5%-1/16W
0.1uF-0402-X5R- 20%-16V
S2_IP
S2_IN
S2_QN
S2_QP
RS10
RS11
RS12
RS13
IF_IP
IF_IN
IF_QN
IF_QP
CS33
CS35
CS36
CS38
IP_S
IM_S
QN_S
QP_S
CS34
CS37
CS39
CS41
NC:4.7pF-0402-NPO- 5%-50V
NC:4.7pF-0402-NPO- 5%-50V
NC:4.7pF-0402-NPO- 5%-50V
NC:4.7pF-0402-NPO- 5%-50V
0ohm-0402- 5%-1/16W
0ohm-0402- 5%-1/16W
0ohm-0402- 5%-1/16W
0ohm-0402- 5%-1/16W
0.1uF-0402-X5R- 20%-16V
0.1uF-0402-X5R- 20%-16V
0.1uF-0402-X5R- 20%-16V
0.1uF-0402-X5R- 20%-16V
12V_OFF
LZ1
LZ2
CZ1
CZ2
100uF-16V- 20%-51 1-105℃-黑底白字-编带-F=2.5-XF
10uF-0805-X5R- 20%-16V
0.1uF-0402-X5R- 20%-16V
PZ1608U121-2R0TF(120ohm-2000mA)
LZ3
DZ1
SCD54TL-220M
1N5819-SMA
10uF-1206-X5R- 10%-25V
1uF-0603-X5R- 10%-25V
100uF-25V- 20%-67 -105℃-XF
CZ3
CZ4
CZ5
UZ1
DC-DC芯片,IC DC-DC,16V,700KHz,SOP-8,SMD,RT5047GSP,Richtek
3V3_Tun_S2
VIN
LX
BOOST
RT5047
LNB
EN
SEL
COMP
TONE
GND
EXTG
DZ4
LZ4
LNB_PW
DF3
CZ23
CZ9
10Kohm-0402- 5%-1/16W
NC:10Kohm-0402- 5%-1/16W
10Kohm-0402- 5%-1/16W
NC:10Kohm-0402- 5%-1/16W
LNB_PWEN
DZ4
DZ5
DZ6
CZ10
CZ11
100ohm-0402- 5%-1/16W
100ohm-0402- 5%-1/16W
4K7ohm-0402- 5%-1/16W
NC:4K7ohm-0402- 5%-1/16W
4K7ohm-0402- 5%-1/16W
5V_ANT_ON/OFF
DZ8
LNB_PWEN
DZ9
NC:100ohm-0402- 5%-1/16W
100ohm-0402- 5%-1/16W
1N5819-SMA
1N5819-SMA
10uF-1206-X5R- 10%-25V
PZ1608U121-2R0TF(120ohm-2000mA)
0.01uF-0402-X7R- 10%-50V
3V1_Tun
CS10
RS18
IFAGC_RT210
RS19
IFAGC_S/
RS21
IFAGC_S
CS45
CS9
10Kohm-0402- 5%-1/16W
0.1uF-0402-X5R- 20%-16V
10Kohm-0402- 5%-1/16W
0.1uF-0402-X5R- 20%-16V
0ohm-0402- 5%-1/16W
0.22uF-0402-X5R- 10%-16V
IFAGC_S2_Module
RS9
NC:10Kohm-0402- 5%-1/16W
NC:0.1uF-0402-X5R- 20%-16V
CS4
3V3_STB
LL16
NC:0ohm-0402- 5%-1/16W
UT2
LCU117CLTR33
VI
VO
ADJ
5V_M
3V3_Tun
LT12
3V3_Tun_T
CT24
CT25
CT28
CT29
CT30
CT38
CT20
CT39
NC:10uF-0603-X5R- 20%-6.3V
0.1uF-0402-X5R- 20%-16V
10uF-0603-X5R- 20%-6.3V
0.1uF-0402-X5R- 20%-16V
1uF-0402-X5R- 20%-16V
NC:10uF-0603-X5R- 20%-6.3V
FCM1005KF-121T06(120ohm-500mA)
10uF-0603-X5R- 20%-6.3V
NC/1000pF-0402-X7R- 10%-50V

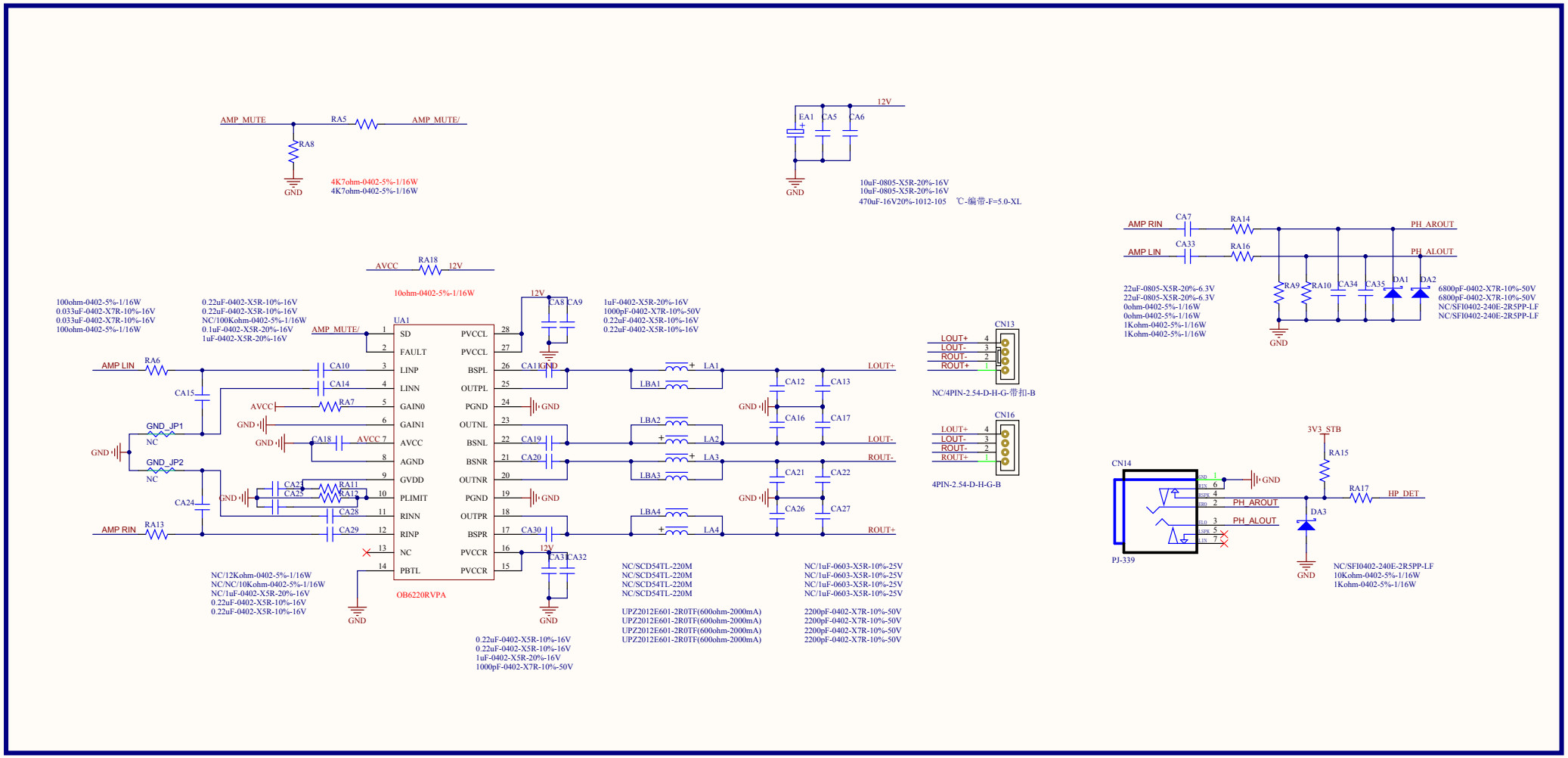
AMP_MUTE
RA5
AMP_MUTE/
RA8
GND
4K7ohm-0402-5%-1/16W
4K7ohm-0402-5%-1/16W
12V
EA1
CA5
CA6
GND
10uF-0805-X5R-20%-16V
10uF-0805-X5R-20%-16V
470uF-16V20%-1012-105 ℃-编带-F=5.0-XL
AMP RIN
CA7
RA14
PH_AROUT
AMP LIN
CA33
RA16
PH_ALOUT
22uF-0805-X5R-20%-6.3V
22uF-0805-X5R-20%-6.3V
0ohm-0402-5%-1/16W
0ohm-0402-5%-1/16W
1Kohm-0402-5%-1/16W
1Kohm-0402-5%-1/16W
RA9
RA10
CA34
CA35
DA1
DA2
6800pF-0402-X7R-10%-50V
6800pF-0402-X7R-10%-50V
NC/SFI0402-240E-2R5PP-LF
NC/SFI0402-240E-2R5PP-LF
GND
AVCC
RA18
12V
10ohm-0402-5%-1/16W
100ohm-0402-5%-1/16W
0.033uF-0402-X7R-10%-16V
0.033uF-0402-X7R-10%-16V
100ohm-0402-5%-1/16W
0.22uF-0402-X5R-10%-16V
0.22uF-0402-X5R-10%-16V
NC/100Kohm-0402-5%-1/16W
0.1uF-0402-X5R-20%-16V
1uF-0402-X5R-20%-16V
AMP_MUTE/
UA1
SD
FAULT
LINP
LINN
GAIN0
GAIN1
AVCC
AGND
GVDD
PLIMIT
RINN
RINP
NC
PBTL
PVCCL
PVCCL
BSPL
OUTPL
PGND
OUTNL
BSNL
BSNR
OUTNR
PGND
OUTPR
BSPR
PVCCR
PVCCR
OB6220RVPA
CA8
CA9
CA11
CA19
CA20
CA30
CA31
CA32
1uF-0402-X5R-20%-16V
1000pF-0402-X7R-10%-50V
0.22uF-0402-X5R-10%-16V
0.22uF-0402-X5R-10%-16V
AMP LIN
RA6
CA10
CA14
CA15
RA7
GND_JP1
NC
GND_JP2
NC
CA18
CA21
CA25
RA11
RA12
CA28
CA24
CA29
AMP RIN
RA13
NC/12Kohm-0402-5%-1/16W
NC/NC/10Kohm-0402-5%-1/16W
NC/1uF-0402-X5R-20%-16V
0.22uF-0402-X5R-10%-16V
0.22uF-0402-X5R-10%-16V
0.22uF-0402-X5R-10%-16V
0.22uF-0402-X5R-10%-16V
1uF-0402-X5R-20%-16V
1000pF-0402-X7R-10%-50V
LA1
LA2
LA3
LA4
LBA1
LBA2
LBA3
LBA4
CA12
CA13
CA16
CA17
CA21
CA22
CA26
CA27
LOUT+
LOUT-
ROUT-
ROUT+
NC/SCD54TL-220M
NC/SCD54TL-220M
NC/SCD54TL-220M
NC/SCD54TL-220M
UPZ2012E601-2R0TF(600ohm-2000mA)
UPZ2012E601-2R0TF(600ohm-2000mA)
UPZ2012E601-2R0TF(600ohm-2000mA)
UPZ2012E601-2R0TF(600ohm-2000mA)
NC/1uF-0603-X5R-10%-25V
NC/1uF-0603-X5R-10%-25V
NC/1uF-0603-X5R-10%-25V
NC/1uF-0603-X5R-10%-25V
2200pF-0402-X7R-10%-50V
2200pF-0402-X7R-10%-50V
2200pF-0402-X7R-10%-50V
2200pF-0402-X7R-10%-50V
CN13
NC/4PIN-2.54-D-H-G-带扣-B
CN16
4PIN-2.54-D-H-G-B
CN14
PJ-339
3V3_STB
RA15
RA17
HP_DET
DA3
PH_AROUT
PH_ALOUT
NC/SFI0402-240E-2R5PP-LF
10Kohm-0402-5%-1/16W
1Kohm-0402-5%-1/16W