CA-217S

SERVICE MANUAL

CONTENT

CHAPTER1(ACOUSTIC)

GENERAL CHART---------- 3

BILL OF MATERIAL---------- 3

CHAPTER2(ELECTRONIC

Principle chart---------- 5-7

Pcb board---------- 8-10

Bill of material---------- 11

Chapter1
(Acoustic)

GENERAL CHART

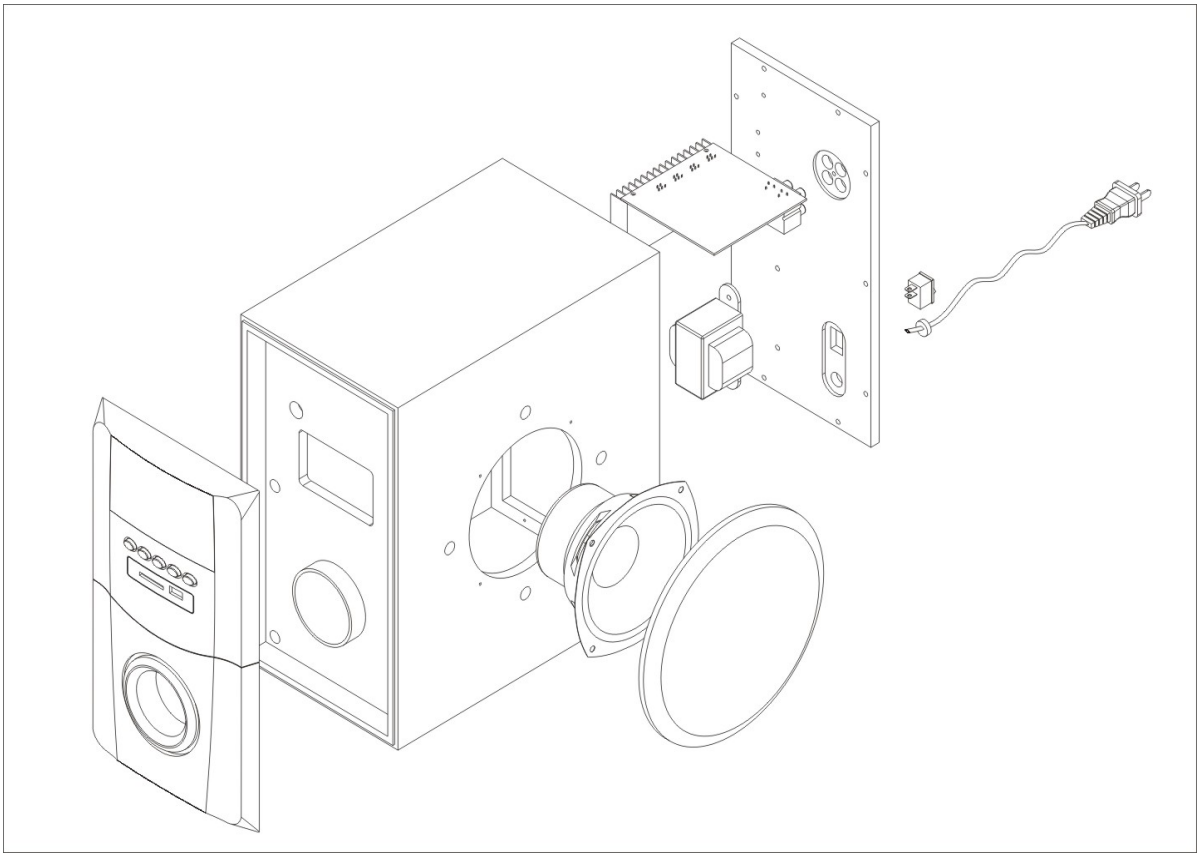

BILL OF MATERIAL

Product code: CA-217S Product name:CA-217S SAT export satellite speaker black

Item	Material code	Material description	specification	unit	dosage	Remark
1	01.21.0003025	3"4Ω10W speaker driver	the speaker driver for satellite	PCS	2	

Product code:CA-217S Product name:CA-217S SUB export subwoofer black BBK

ltem	Material code	Material description	specification	unit	dosage
1	01.21.0525006	5.25"8Ω40W speaker driver	the bass speaker driver	PCS	1.0000

Chapter2
(Acoustic)

PRINCIPLE CHART

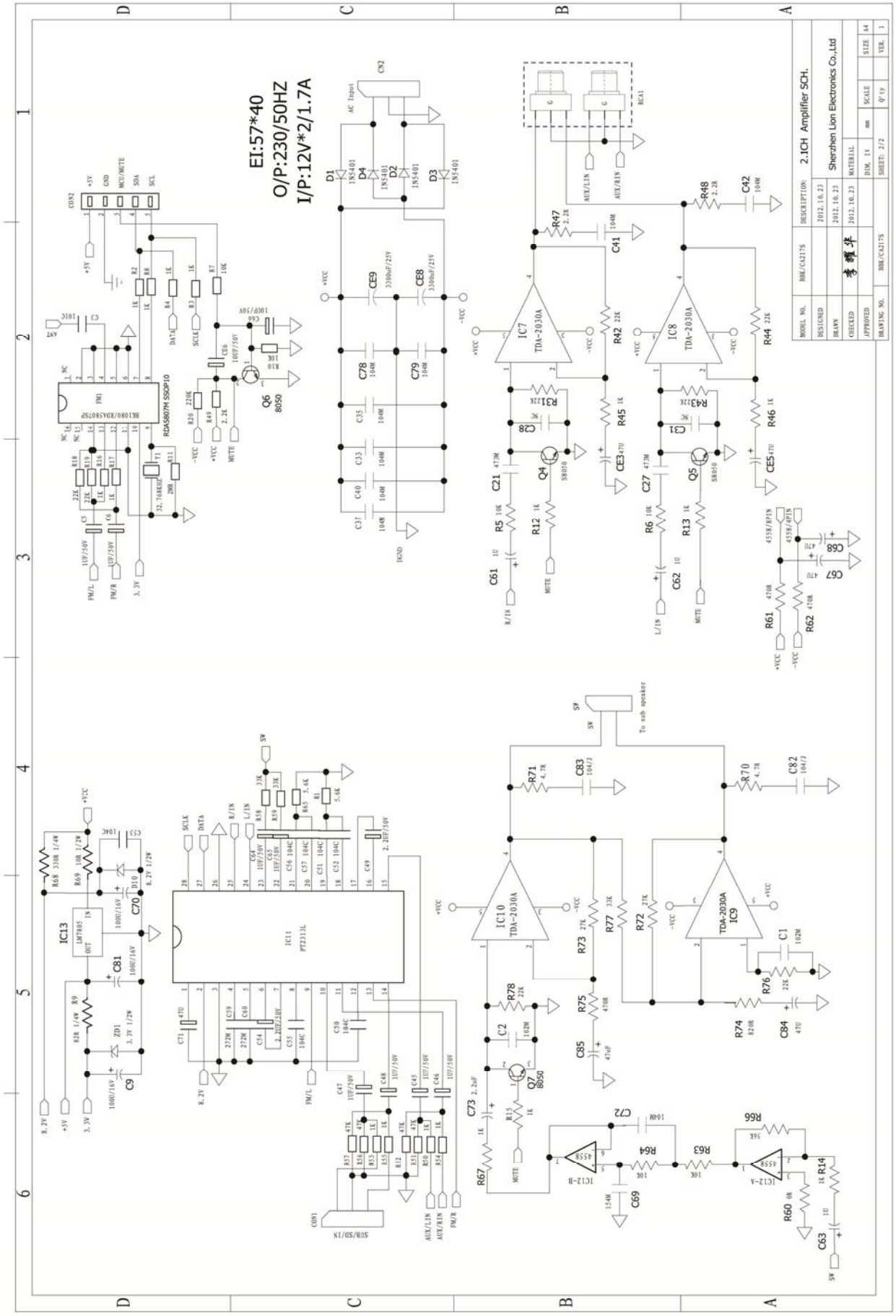

PRINCIPLE CHART

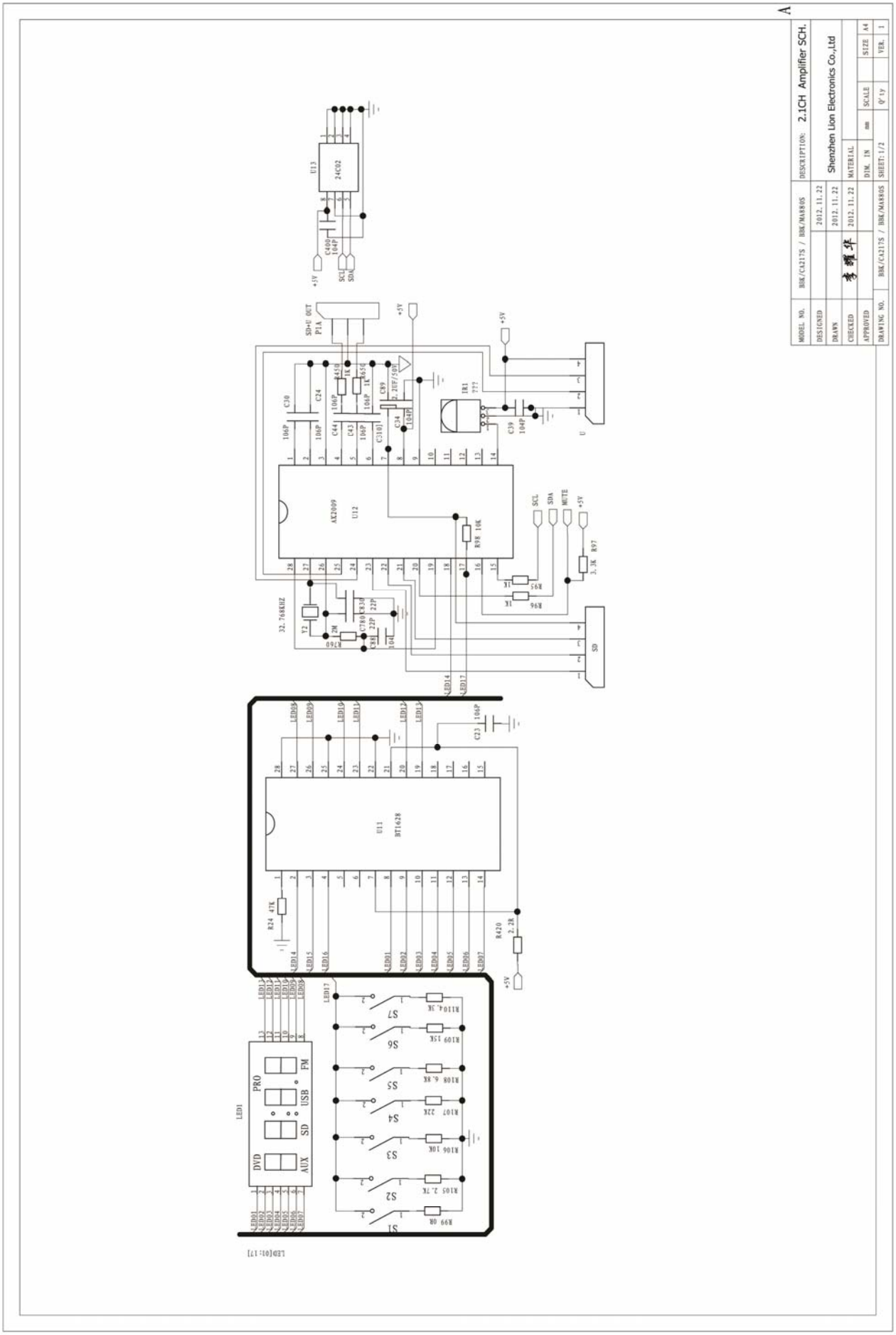

PCB BOARD

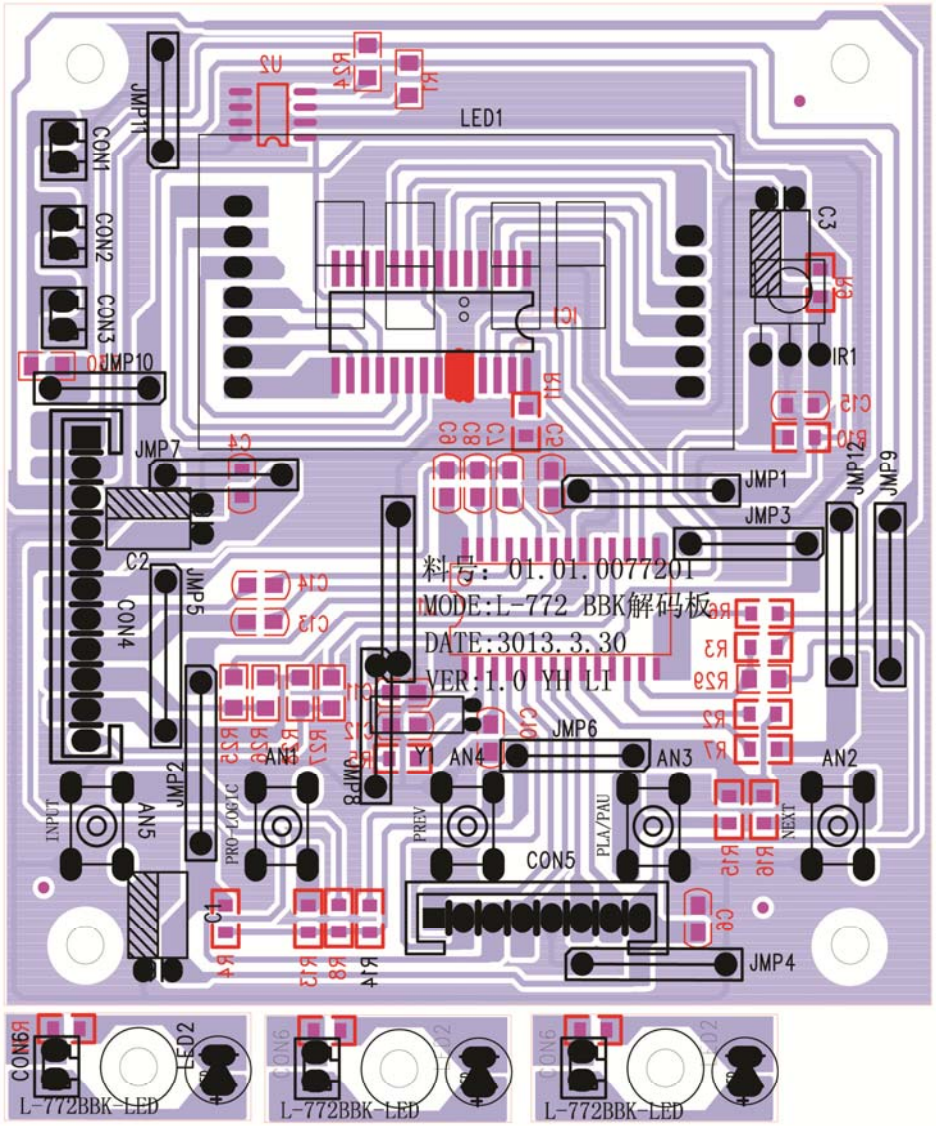
LED1
JMP11
CON1
CON2
CON3
JMP10
JMP7
C2
CON4
JMP5
JMP2
AN5
INPUT
AN1
PRO-CONTC
JMP8
Y1
AN4
PREV
JMP6
AN3
PLA/PAU
CON5
AN2
NEXT
JMP1
JMP3
JMP12
JMP9
JMP4
C3
IR1
料号：01.01.0077201
MODE:L-772 BBK解码板
DATE:3013.3.30
VER:1.0 YH LI
CON6
LED2
L-772BBK-LED
L-772BBK-LED
L-772BBK-LED

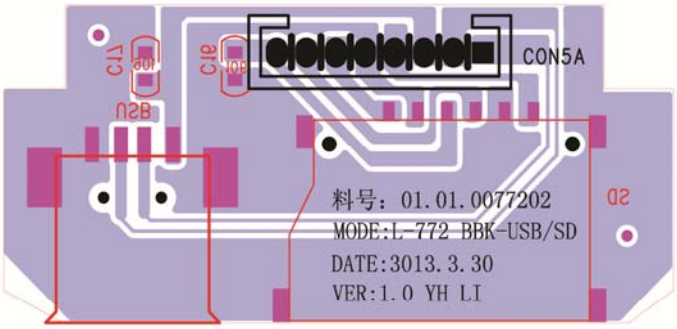
CON5A
料号：01.01.0077202
MODE:L-772 BBK-USB/SD
DATE:3013.3.30
VER:1.0 YH LI

PCB BOARD

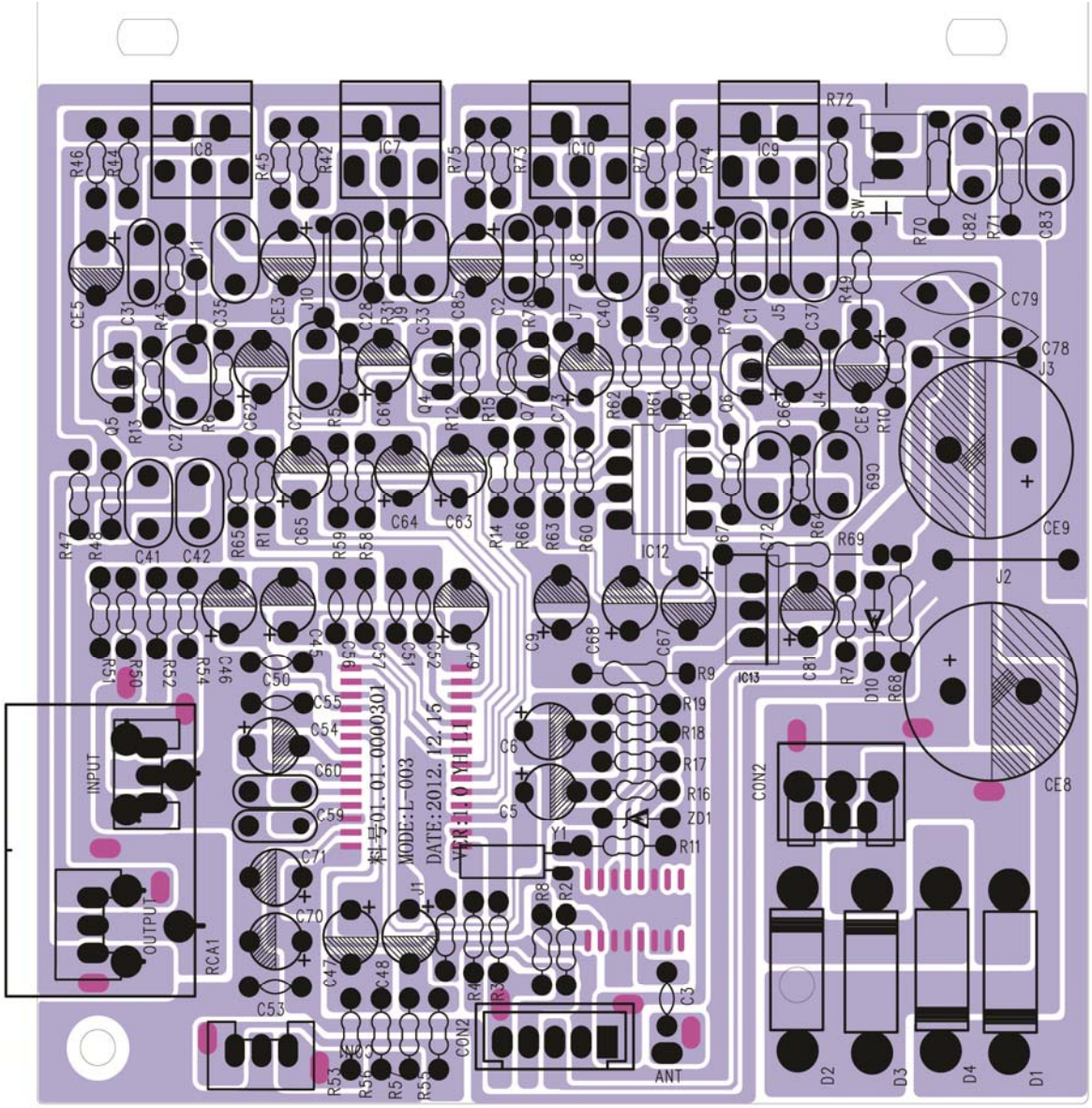
INPUT
OUTPUT
RCA1
MODE:L-003
DATE:2012.12.15
ANT
CON2
IC8
IC7
IC10
IC9
IC12
IC13
J1
J2
J3
SW
D1
D2
D3
D4
D10
ZD1
Y1
CE8
CE9
C79
C78

BILL OF MATERIAL

CA-217S

ltem	Material code	Material description	specification	unit	Dosag	Remark
1	01.20.0000002	switch PRONIC 6A/250V UL/VDE/CQC		PCS	1	
2	01.09.0000009	capacitor Electrolyse 25V 3300uF±20% 16*27(VI)		PCS	2	
3	01.02.0000011	IC L7805 TO-220 FAIRCHILD	ROHS	PCS	1	
4	01.02.0000005	IC TDA2030A DIP5 ST	ROHS	PCS	4	
5	01.02.0000006	IC JRC4558 DIP8	ROHS	PCS	1	
6	01.02.0000108	IC RDA5807M SSOP10	ROHS	PCS	1	
7	01.02.0000003	IC 24C02 SOP-8	ROHS	PCS	1	
8	01.02.0000110	IC AC2096 SOP-28 JL	ROHS	PCS	1	
9	01.02.0000026	IC BT1628 SOP-28	ROHS	PCS	1	
10	01.02.0000097	IC PT2313L SOP28	ROHS	PCS	1	
11	01.18.5740002	EI57*40 IN:230V/50Hz;OUT:12V*2/2A		PCS	1	
12	03.06.0000040	power cable,0.75mm2,L=1.65M with VDE.CE certification		PCS	1	