Service Manual

BBK MP070S

Model No. MP070S

Digital Media Player

TABLE OF CONTENTS

1. Specification……..……..... 3
2. Block Diagrams.....4
3. Power Diagrams…….5
4. Troubleshooting.....6~7
5. PCB Layout Diagrams……...……..8~13
6. Schematic Diagrams……...…….14~23
7. Exploded Diagram And Spare Parts List…….....17

1. Specification

Features	***MP070S***
IC	Realtek1073
Built-In Memory	NAND FLASH 2GB

Video Support Format	Category	Codec	Extension
	MJPEG	**MJPEG**	**.avi**
	DTA	**VCD**	**.DTA**
	MPEG1/2/4	**Div3**	**.avi**
	JPEG	**JPEG**	**.JPEG**
	RMVB	**RMVB**	**.RMVB**
	RM	**RMVB**	**.RM**
	MP3	**MP3**	**. .MP3**
Audio Support Format	DTS、DTS-HD、DUBLY、DUBLY HD		
Connectors			
Slot	SD, MMC,MS		
USB Host	USB2.0		
Audio Output	Coaxial;Optical		
Power AC Input	100-240V; 50/ 60 Hz;0.6A,MAX		
Power Adaptor	● AC Input: 100-240V; 50/ 60 Hz; ● DC Output:12V, 2A ● CE		
40-Key IR Remote Control	x1		
Picture Support Format	JPEG		
EMI/EMC			
Operation Requirement	Operating Temperature/Humidity 0ºC to 40ºC/10% to 90%		

Main system frame diagram

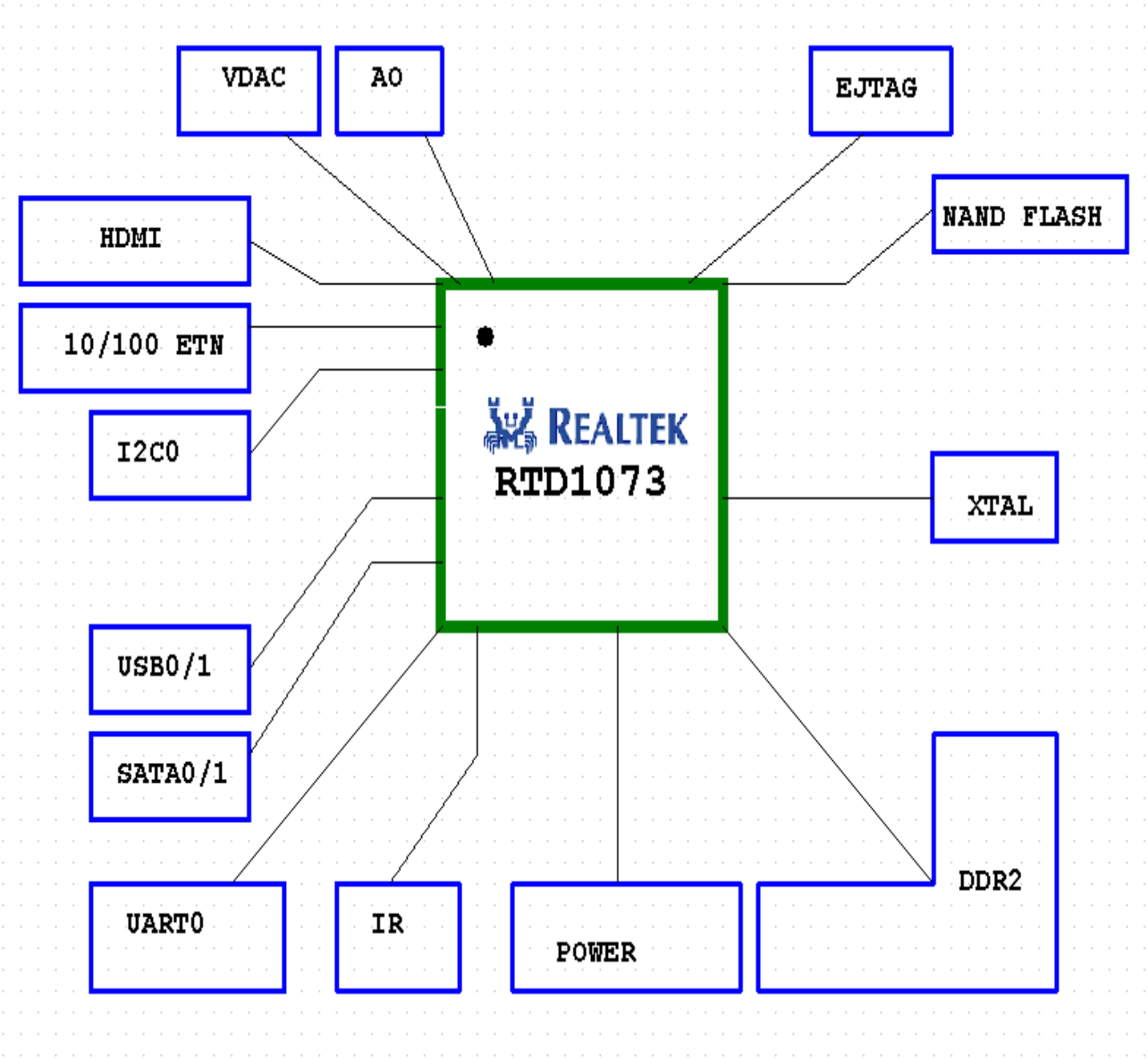

power supply frame diagram

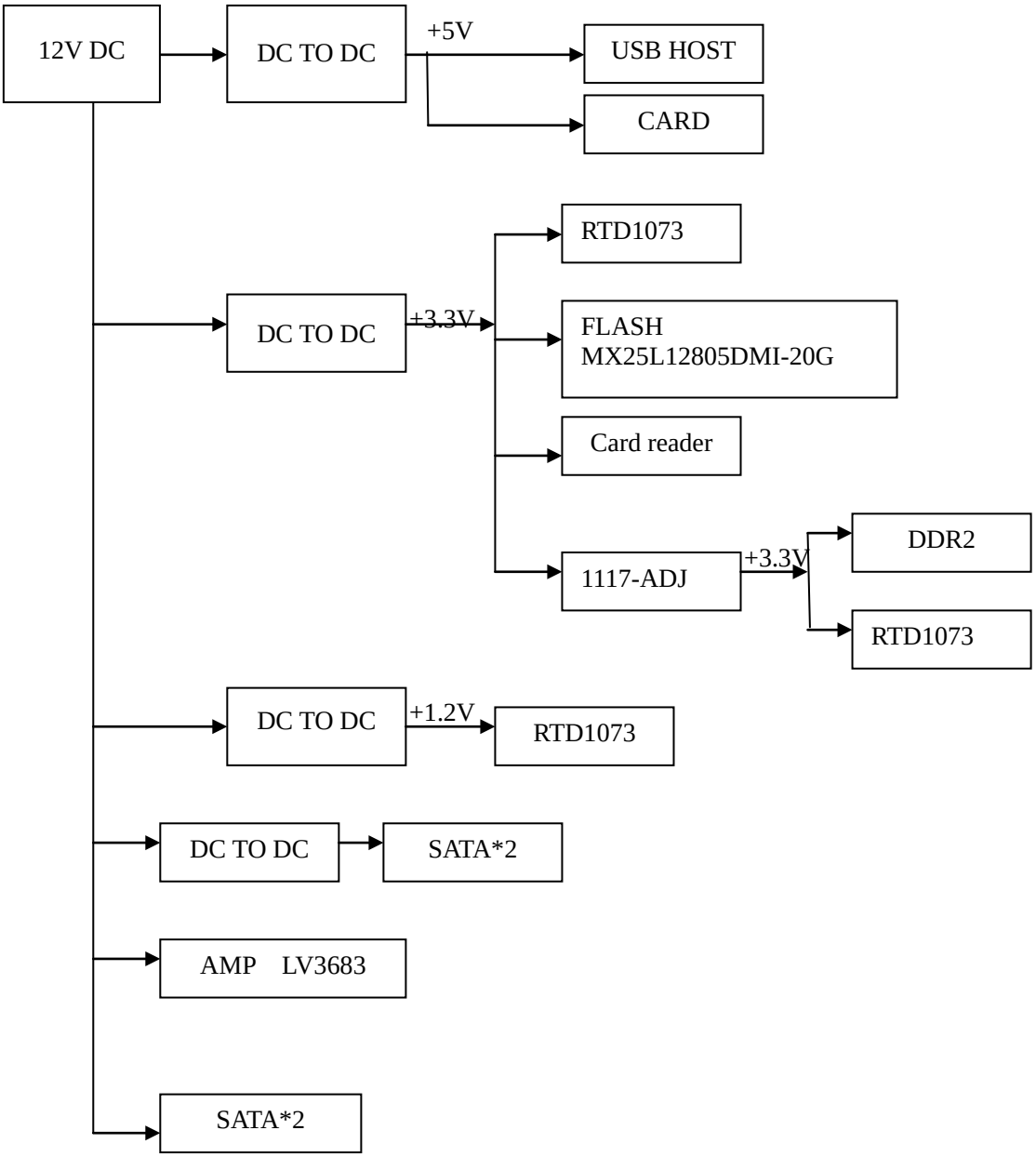

5. Troubleshooting

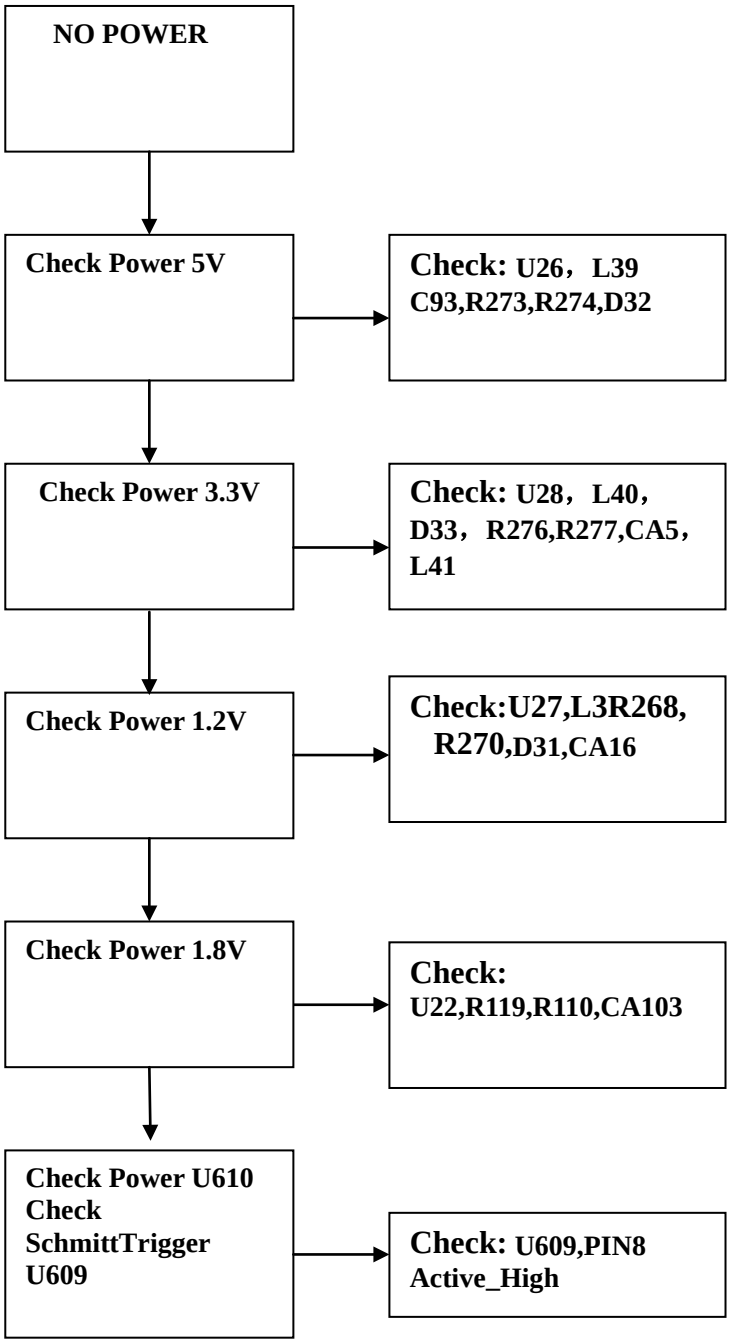

Case analysis：

1. If remote control not work, please：
   a) check if（IR）incomplete weld / weld defect，
   b) Check if +3.3VDD is normal，
   c) Check if R52 is breakover，
   d) Check if U 75 is incomplete weld / weld defect and IR1 breakover。

2. Indicator light doesn't work, please check if D4 , D5 incomplete weld / weld defect or not, or check LED control circuit if R282,R283,R284,R285,R286,R224,Q11,Q18 work or not.

3. If the card SD/MMC/MS can not be read, please check the card slot is damaged or not and U6work or not, for example, whether the voltage 3.3V and voltage 5VD of U6 are normal, or whether the frequency 12MHZ of G2 is OK.

4. If the USB can not be read, please check whether the voltage is 5V , whether R118 and R116 have a short circuit or not, whether R94 R92 R98 R97 is breakover with 40，41，45，46，66 feet of U1 or not, whetherU6 voltage is normal

5. If there is no Coaxial output or abnormal output, please check if C0N2 incomplete weld / weld defect or it is damaged or not. Check if U44 is normal or not

6. If there is no HDMI output, please check the HDMI slot is damaged or not. Check Q6 works or not . R686R67 incomplete weld / weld defect ,Or check if power supply is normal or not.

6.PCB Layout Diagrams

Bottom silk

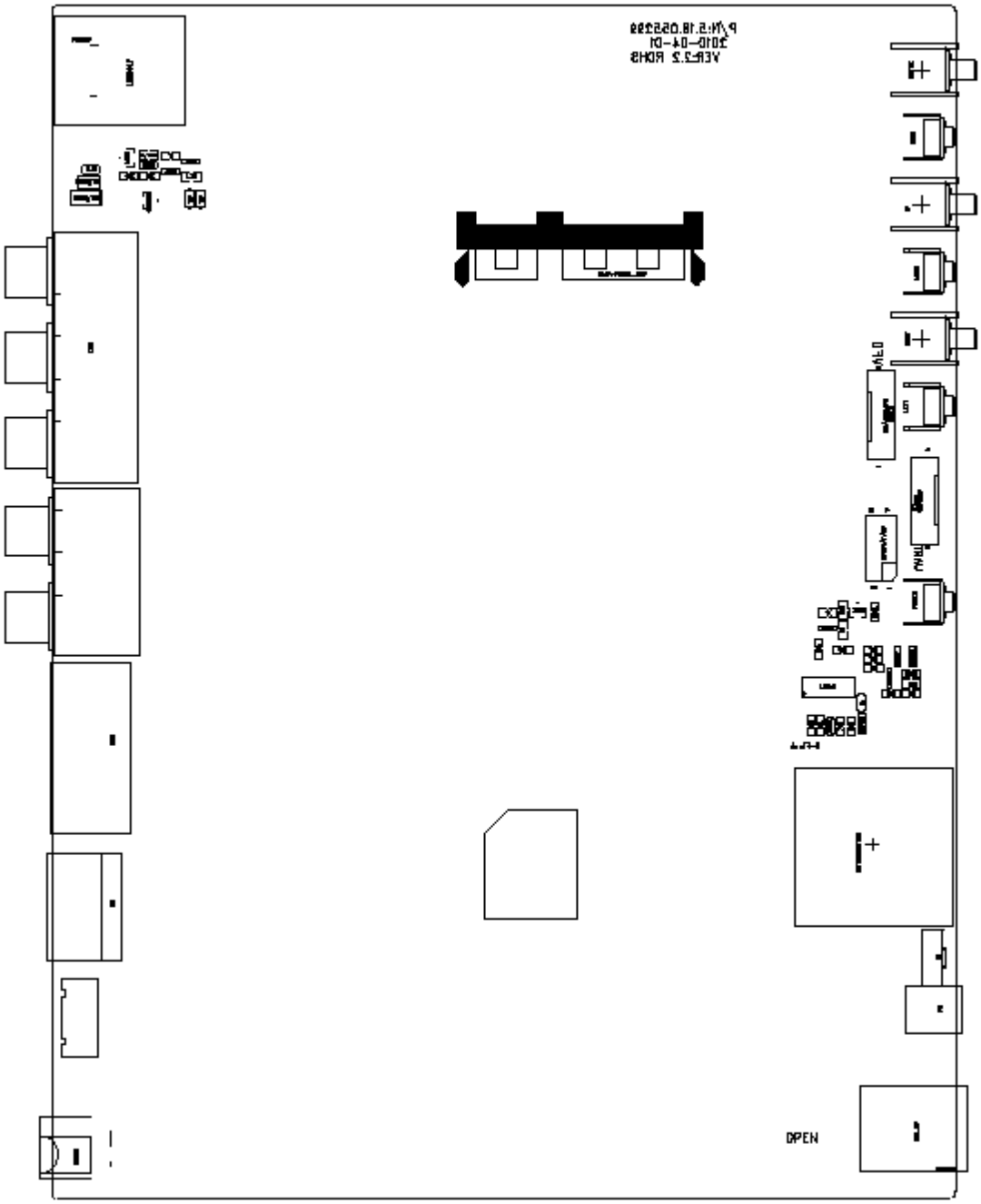

E30T 20091030.pcb – Wed May 05 16:18:10 2010

Bottom Traces

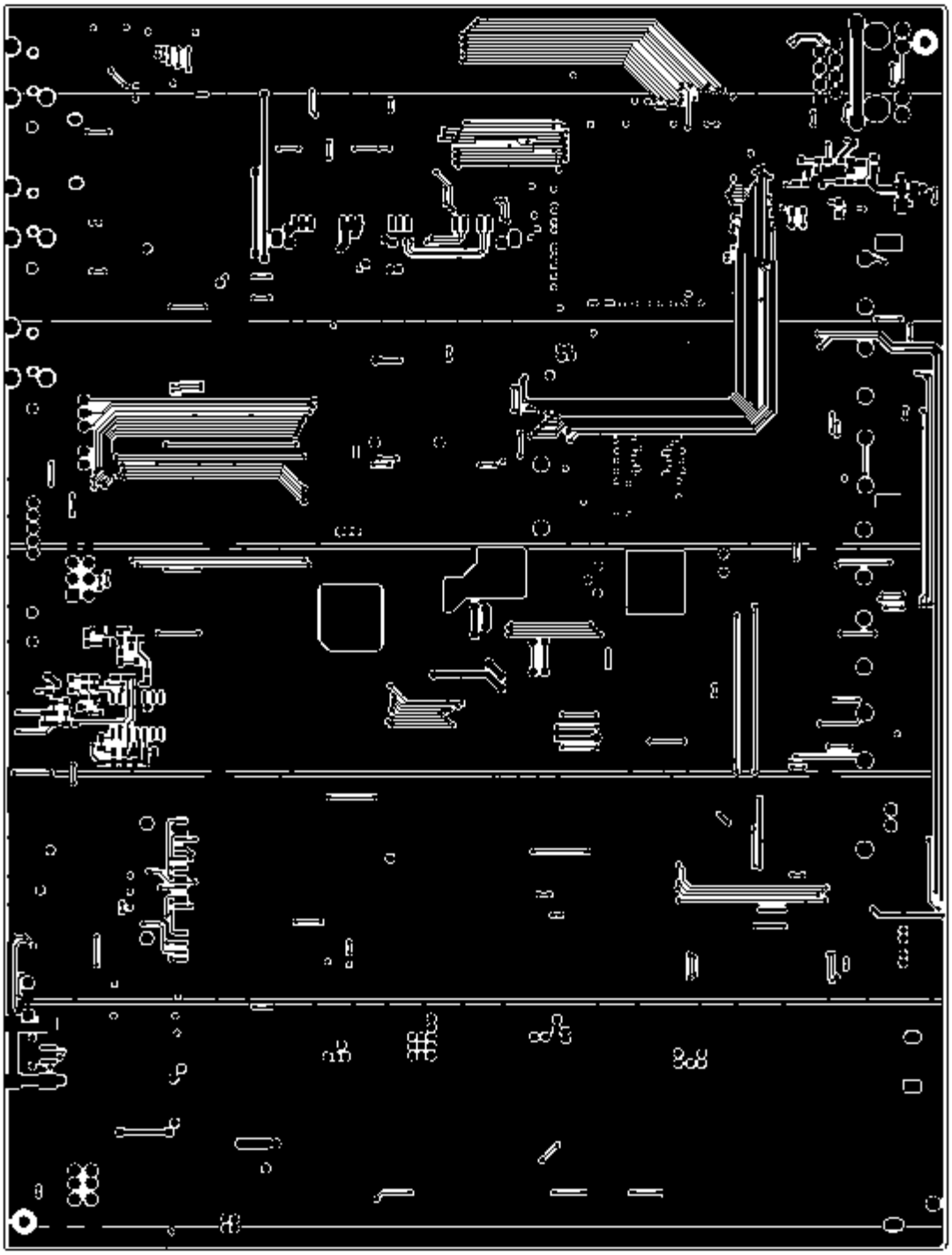

E30T 20091030.pcb – Wed Jul 21 11:56:55 2010

TOP silk

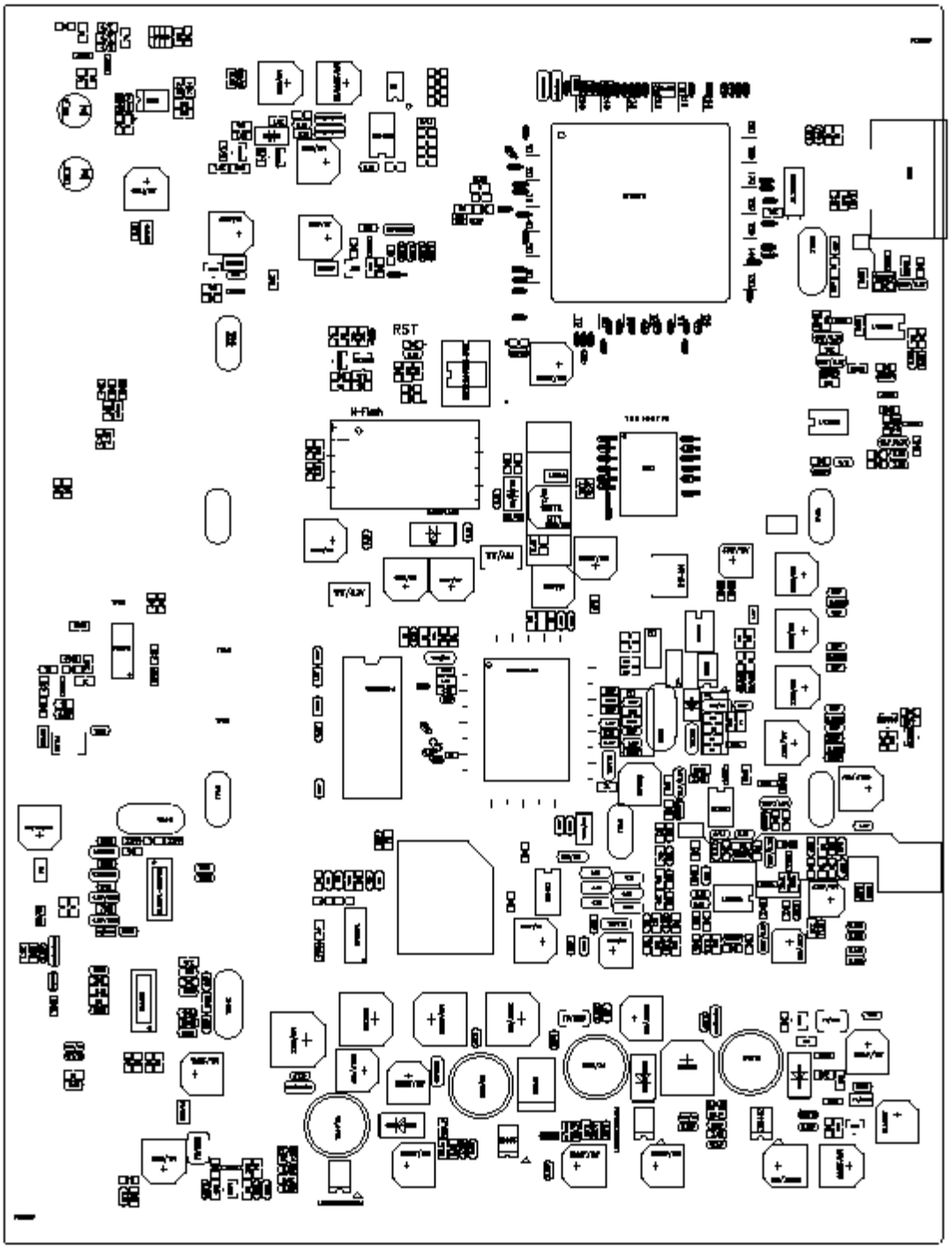

E30T 20091030.pcb – Wed May 05 16:16:34 2010

TOP Traces

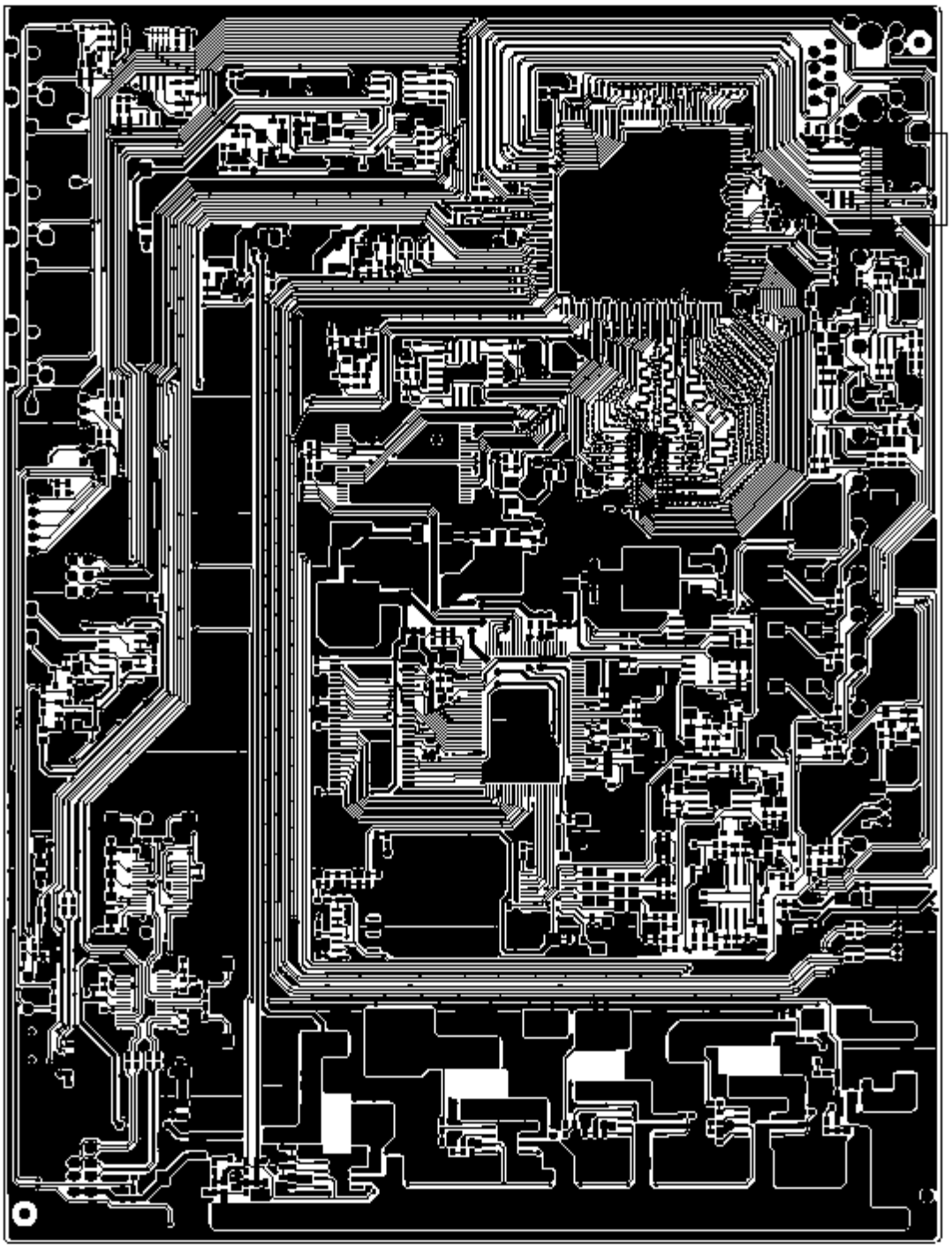

E30T 20091030.pcb – Wed Jul 21 11:55:44 2010

GND Traces

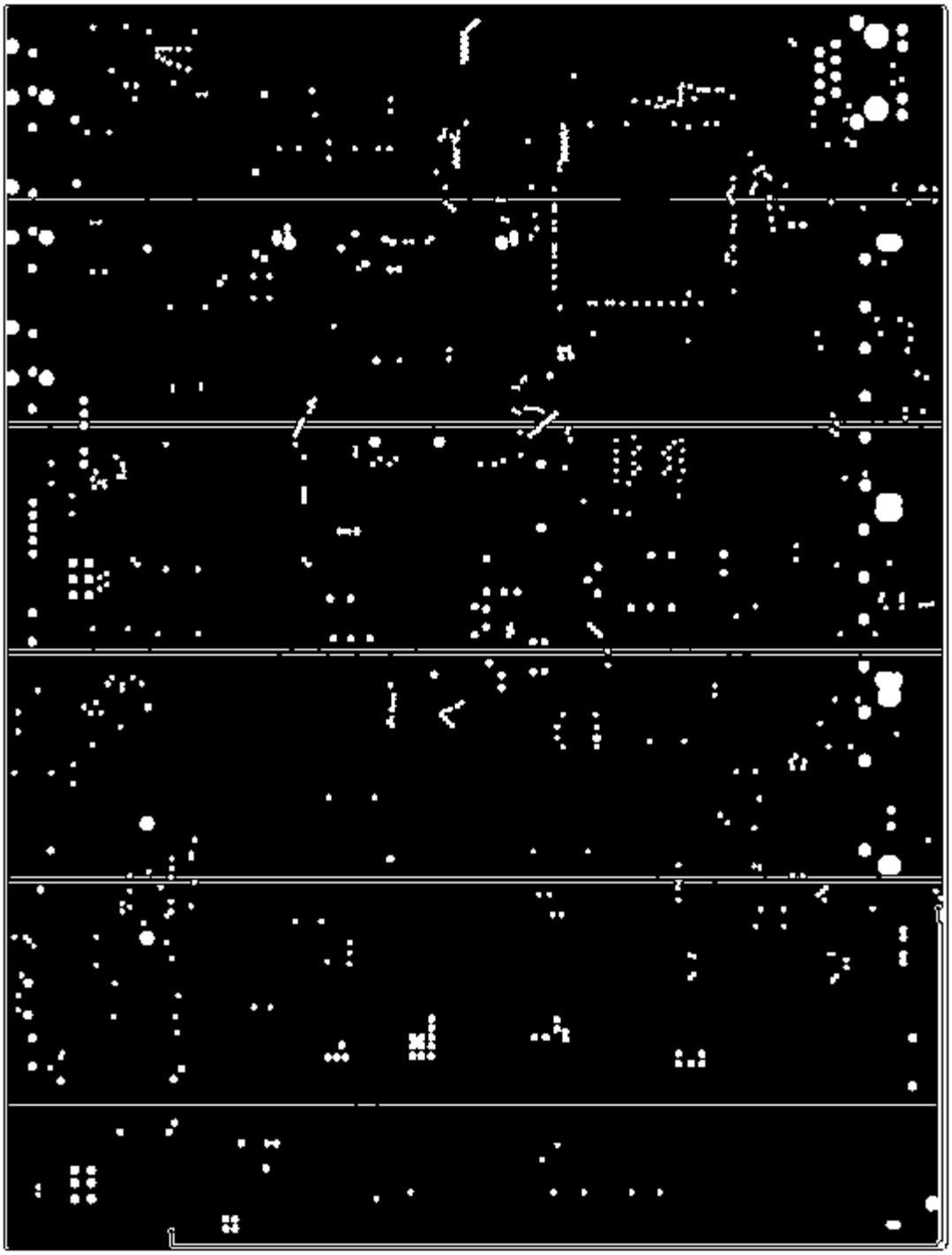

E30T 20091030.pcb – Wed Jul 21 11:53:37 2010

POWER Traces

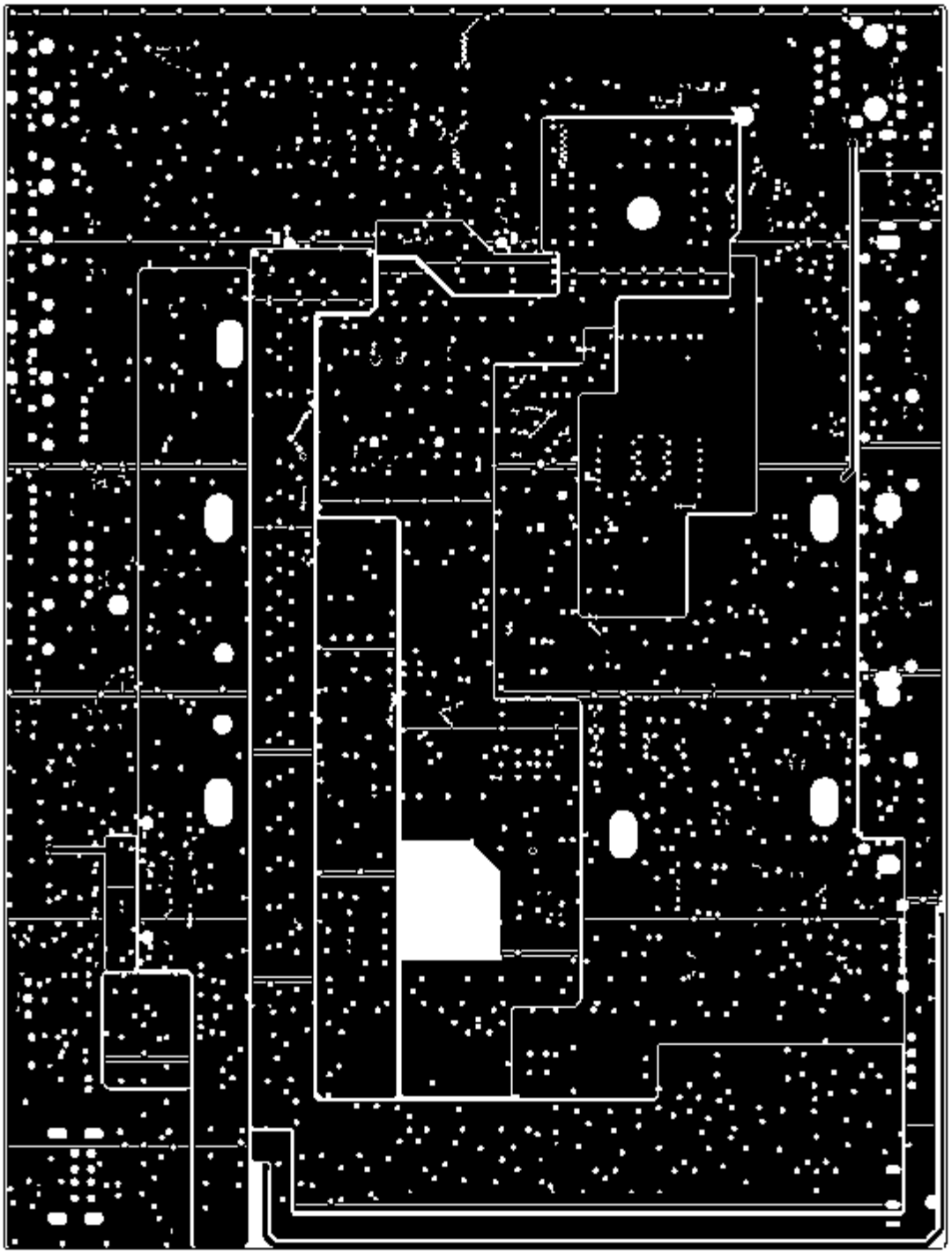

E30T 20091030.pcb – Wed Jul 21 11:52:00 2010

7. Schematic Diagrams

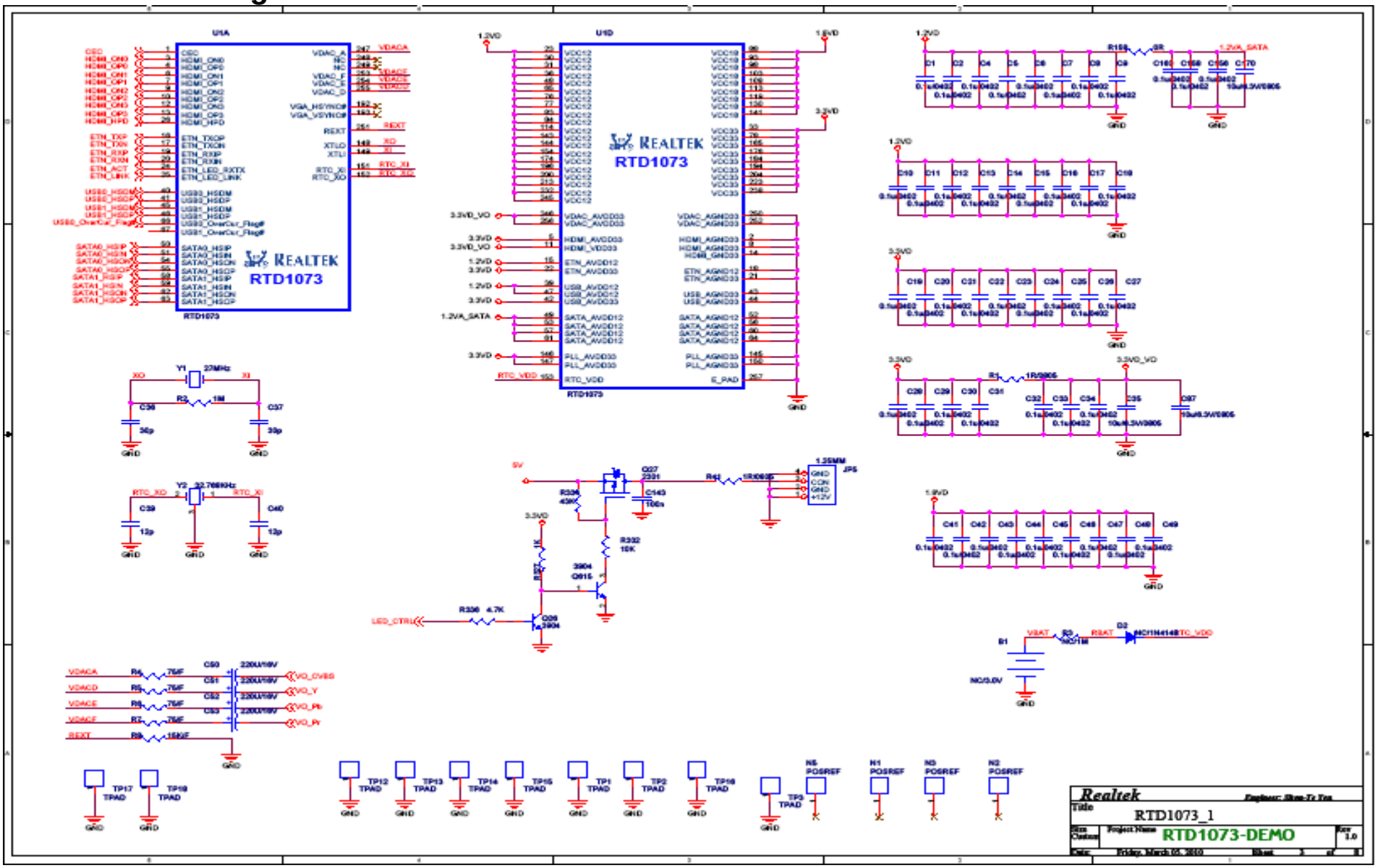

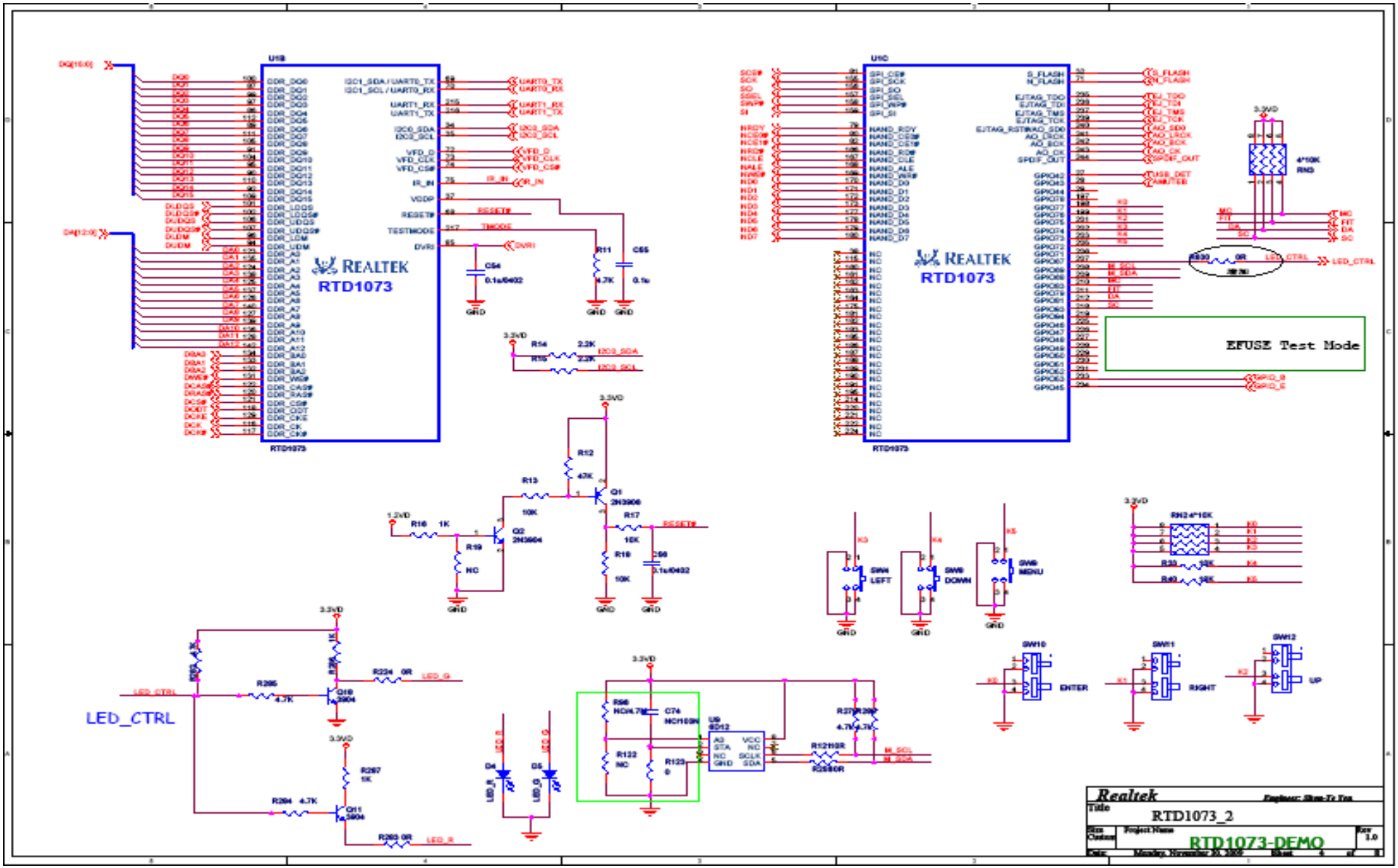
REALTEK
RTD1073
EFUSE Test Mode
LED_CTRL
Realtek
RTD1073_2
RTD1073-DEMO

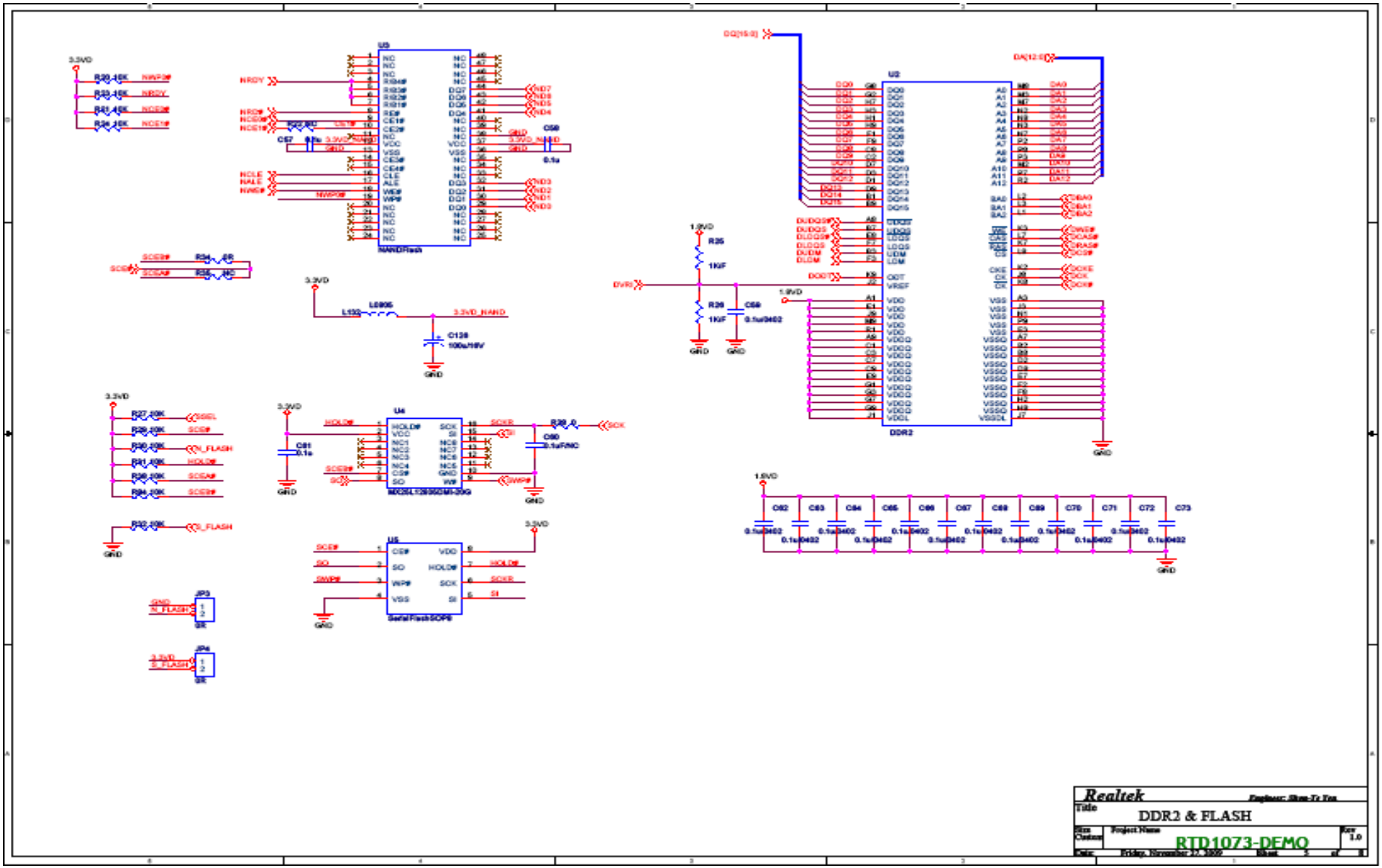
Realtek
Title
DDR2 & FLASH
RTD1073-DEMO
U3
NANDFlash
U2
DDR2
U4
U5
SerialFlashSOP8
JP3
JP4

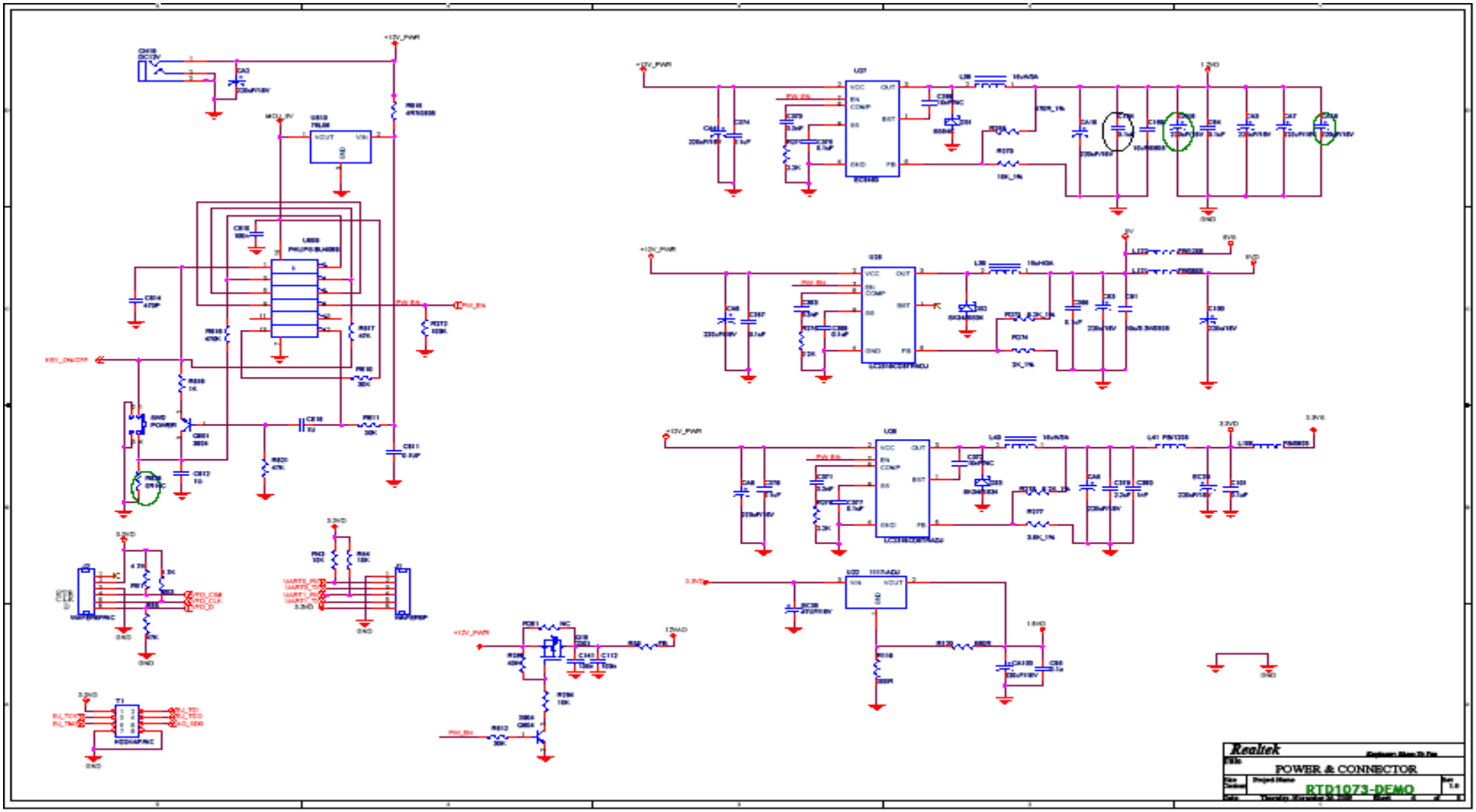
Realtek
POWER & CONNECTOR
RTD1073-DEMO

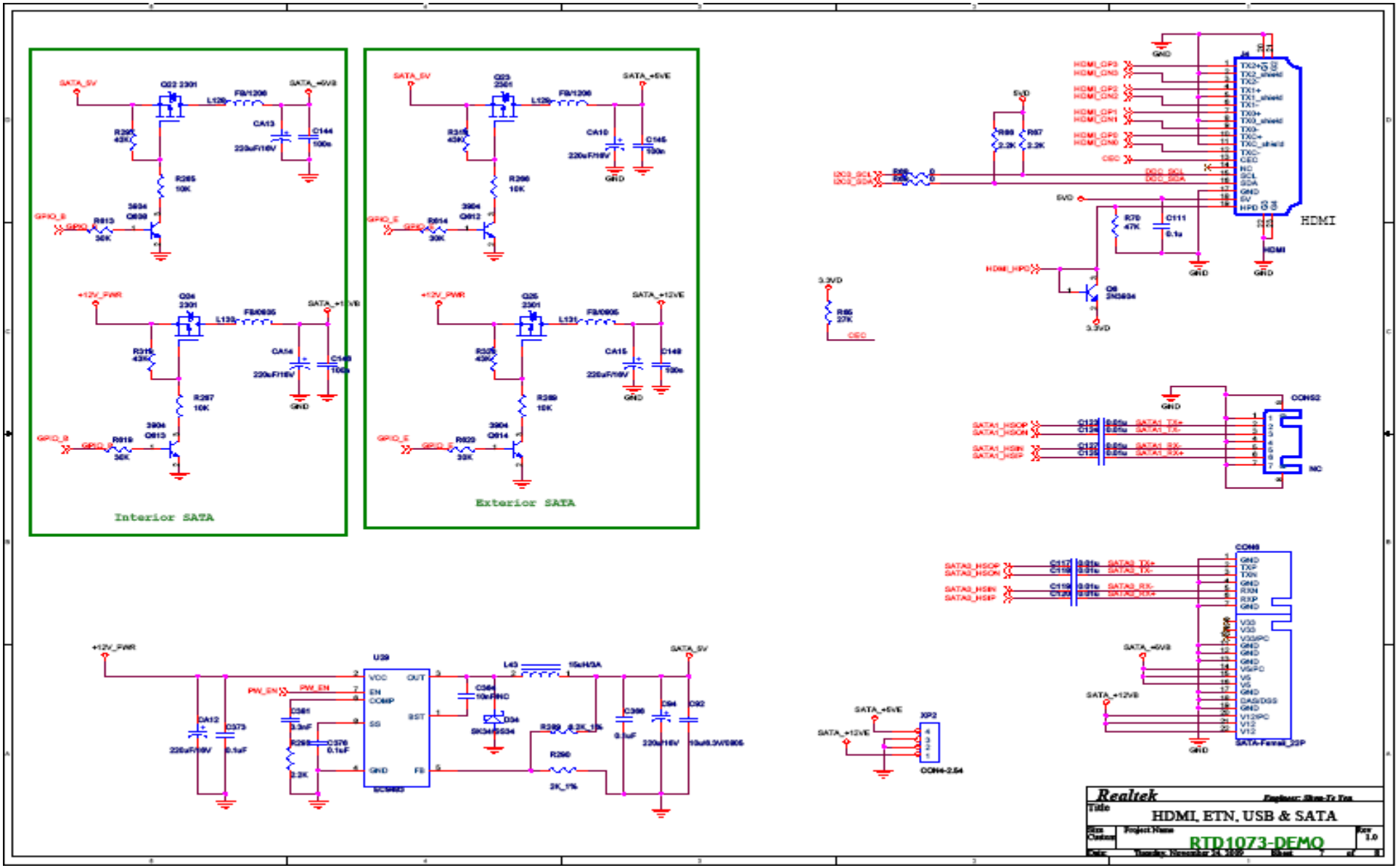
Interior SATA
Exterior SATA
HDMI
CON52
CON8
SATA-Female_23P
XP2
CON4-2.54
U39
Realtek
HDMI, ETN, USB & SATA
RTD1073-DEMO

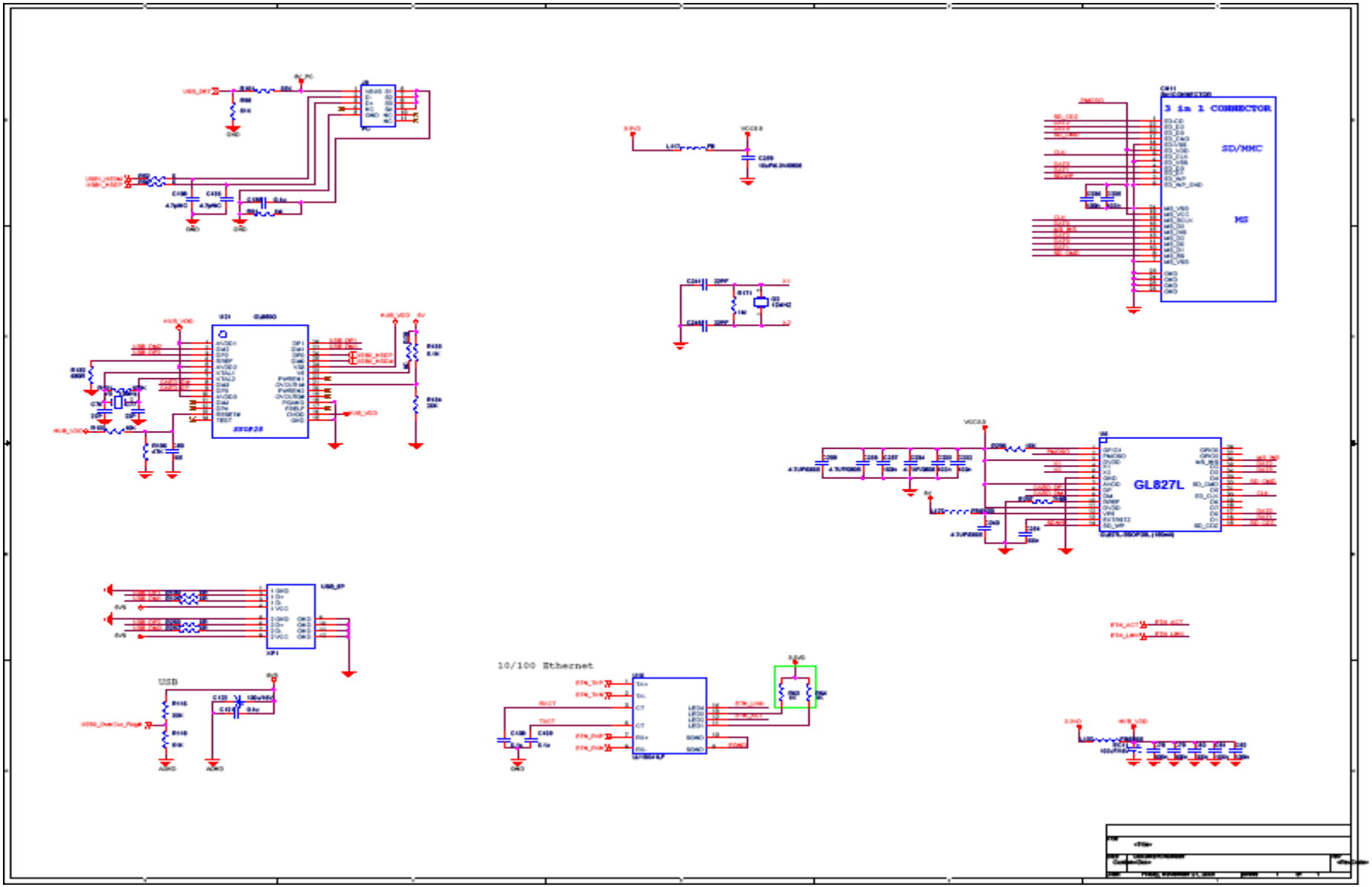
3 in 1 CONNECTOR
SD/MMC
MS
GL827L
10/100 Ethernet
USB

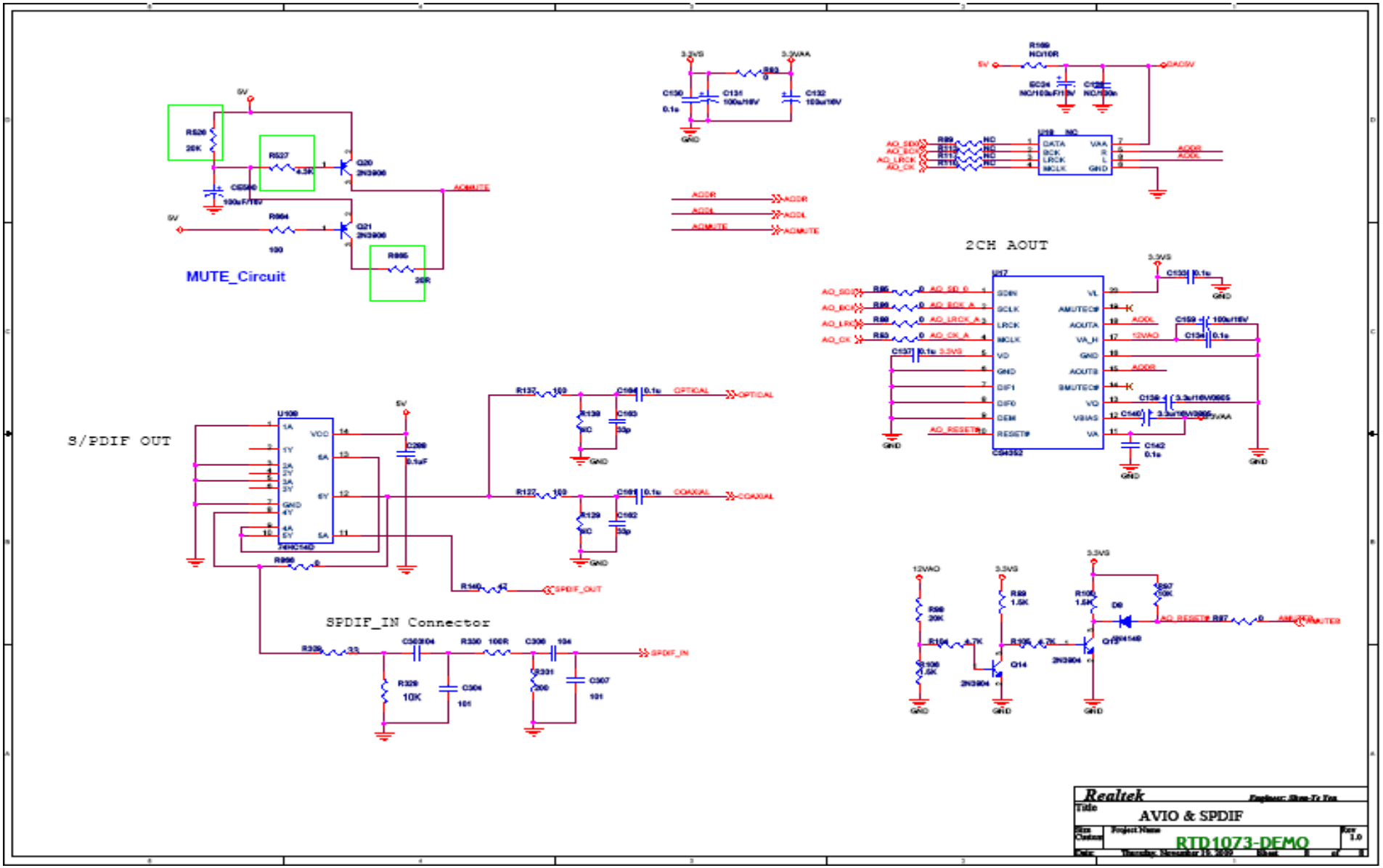
MUTE_Circuit
2CH AOUT
S/PDIF OUT
SPDIF_IN Connector
Realtek
AVIO & SPDIF
RTD1073-DEMO

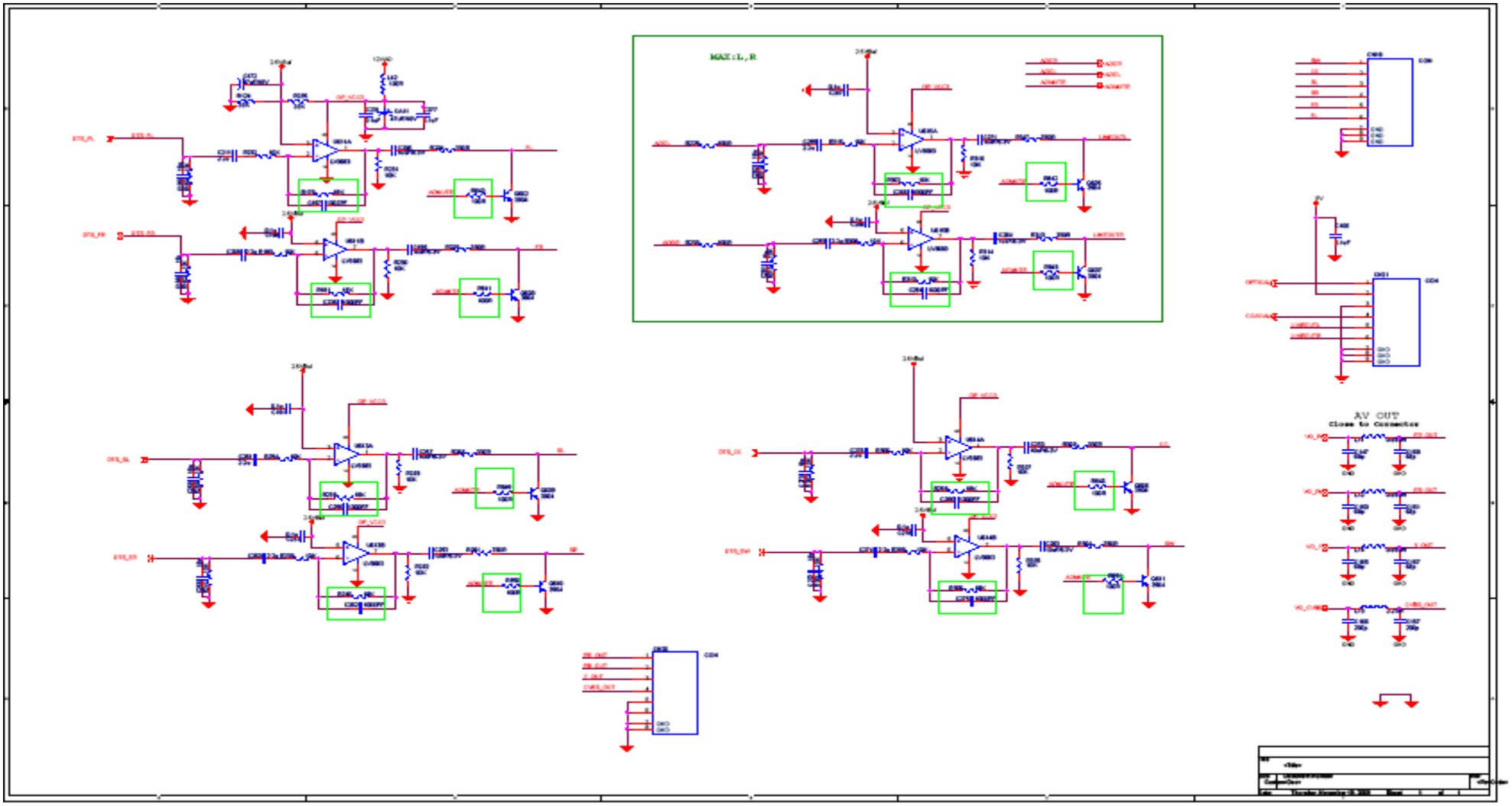
AV OUT
Close to Connector

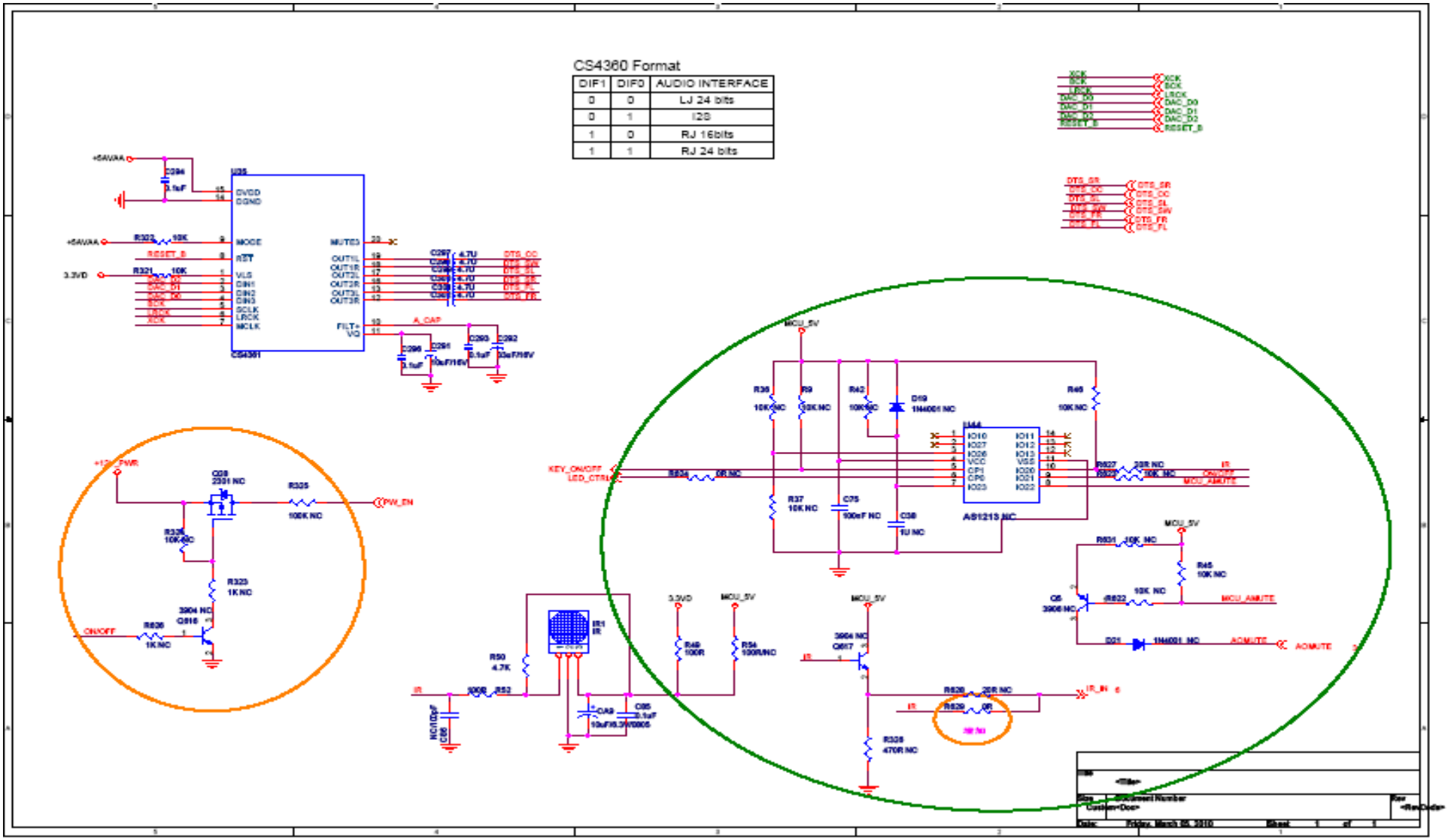
CS4360 Format
DIF1 DIF0 AUDIO INTERFACE
0 0 LJ 24 bits
0 1 I2S
1 0 RJ 16bits
1 1 RJ 24 bits
U25
CS4361
AS1213 NC
MCU_5V
3.3VD
KEY_ON/OFF
LED_CTRL
PW_EN
ON/OFF
MCU_AMUTE
AOMUTE
IR
IR_IN

标 注	变更内容	设 计	日 期	审 核	日 期

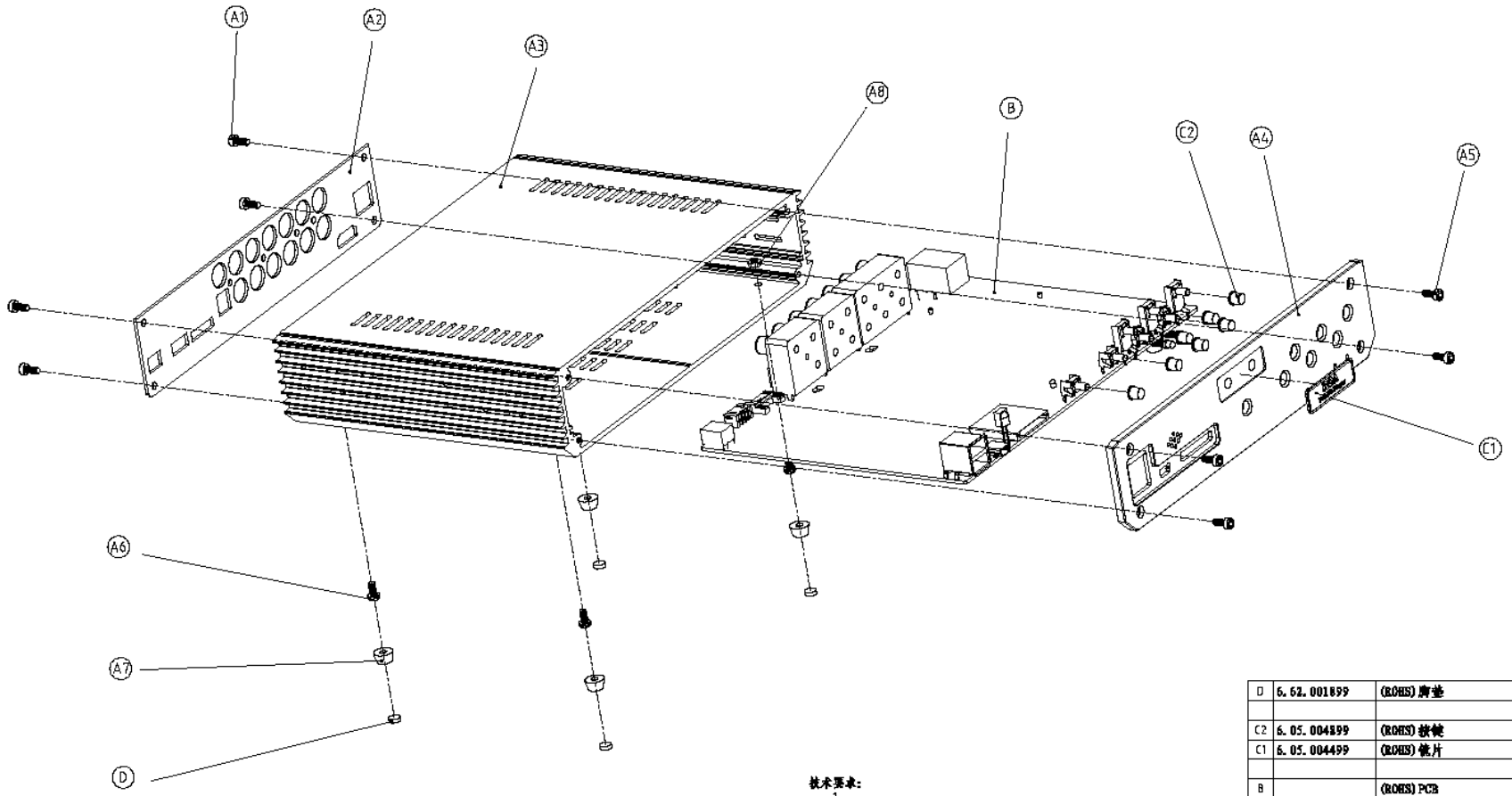

技术要求:
1、

序号	物料编码	名 称	
D	6.62.001899	(ROHS)脚垫	4
C2	6.05.004899	(ROHS)按键	7
C1	6.05.004499	(ROHS)镜片	1
B		(ROHS)PCB	1
A8	6.77.132199	(ROHS)螺母	4
A7	6.05.004299	(ROHS)支架	4
A6	6.76.050199	(ROHS)PM3*8H螺丝	4
A5	6.76.290399	(ROHS)CHA,PBM3*8H,金色螺丝	4
A4	6.10.003499	(ROHS)面板	1
A3	6.31.003899	(ROHS)面壳	1
A2	6.02.012399	(ROHS)背板	1
A1	6.76.290199	(ROHS)CHA,PBM3*8H,黑色螺丝	4

BBK HD MEIDIA PLAYER

MP070S

23

机 型	E30T	材 料:	设计:	日期:
		颜 色:	审核:	日期:
		表面处理	批准:	日期:
		0-30 mm ±0.05 mm		
		30-80 mm ±0.1 mm	模具数量:	数量: 1
		80-180 mm ±0.15 mm		
		180mm 以上 ±0.20 mm		
图幅: A0	张	第 张	共 张	总图号: 00-00-R0000

深圳市瑞致达科技有限公司

名称或代号: E30T爆炸图

单位: mm 比例: 1:1 图幅: A1

图纸编号: 00.000