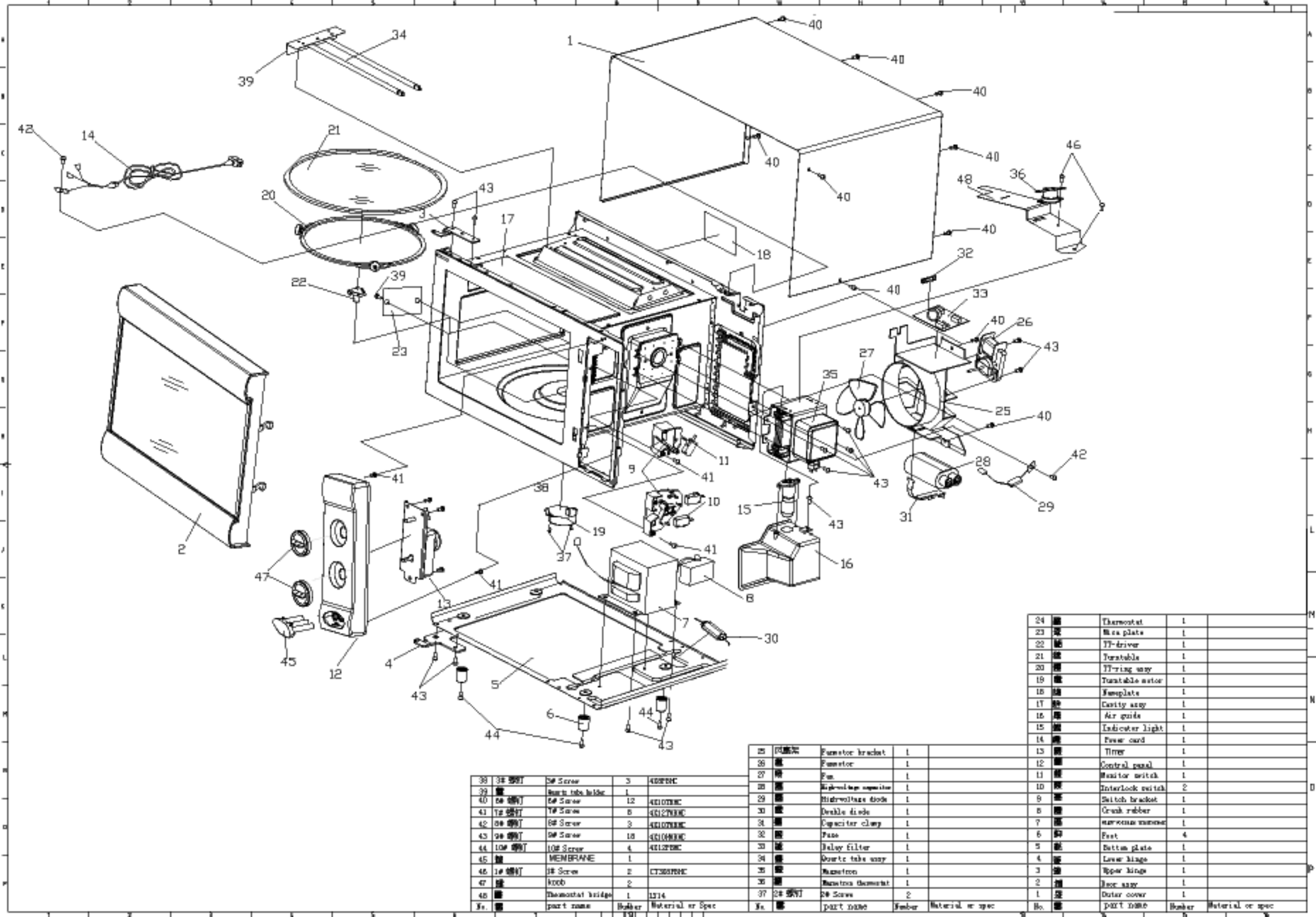

No.		part name	Number	Material or spec
24		Thermostat	1	
23		Mica plate	1	
22		TT-driver	1	
21		Turntable	1	
20		TT-ring assy	1	
19		Turntable motor	1	
18		Nameplate	1	
17		Cavity assy	1	
16		Air guide	1	
15		Indicator light	1	
14		Power cord	1	
13		Timer	1	
12		Control panel	1	
11		Monitor switch	1	
10		Interlock switch	2	
9		Switch bracket	1	
8		Crank rubber	1	
7		microwave measure	1	
6		Foot	4	
5		Bottom plate	1	
4		Lower hinge	1	
3		Upper hinge	1	
2		Door assy	1	
1		Outer cover	1	

No.		part name	Number	Material or spec
25		Fumestor bracket	1	
26		Fumestor	1	
27		Fan	1	
28		High-voltage capacitor	1	
29		Highvoltage diode	1	
30		Double diode	1	
31		Capacitor clamp	1	
32		Fuse	1	
33		Delay filter	1	
34		Quartz tube assy	1	
35		Magnetron	1	
36		Magnetron thermostat	1	
37	2#	2# Screw	2	

No.		part name	Number	Material or Spec
38	3#	3# Screw	3	4S3P8MC
39		Quartz tube holder	1	
40	5#	5# Screw	12	4S10T8MC
41	7#	7# Screw	5	4S12T8MC
42	8#	8# Screw	3	4S10T8MC
43	9#	9# Screw	18	4S10M8MC
44	10#	10# Screw	4	4S12T8MC
45		MEMBRANE	1	
46	1#	1# Screw	2	CT3S8T8MC
47		knob	2	
48		Thermostat bridge	1	1314