DOC.NO: 30-08-ID-103

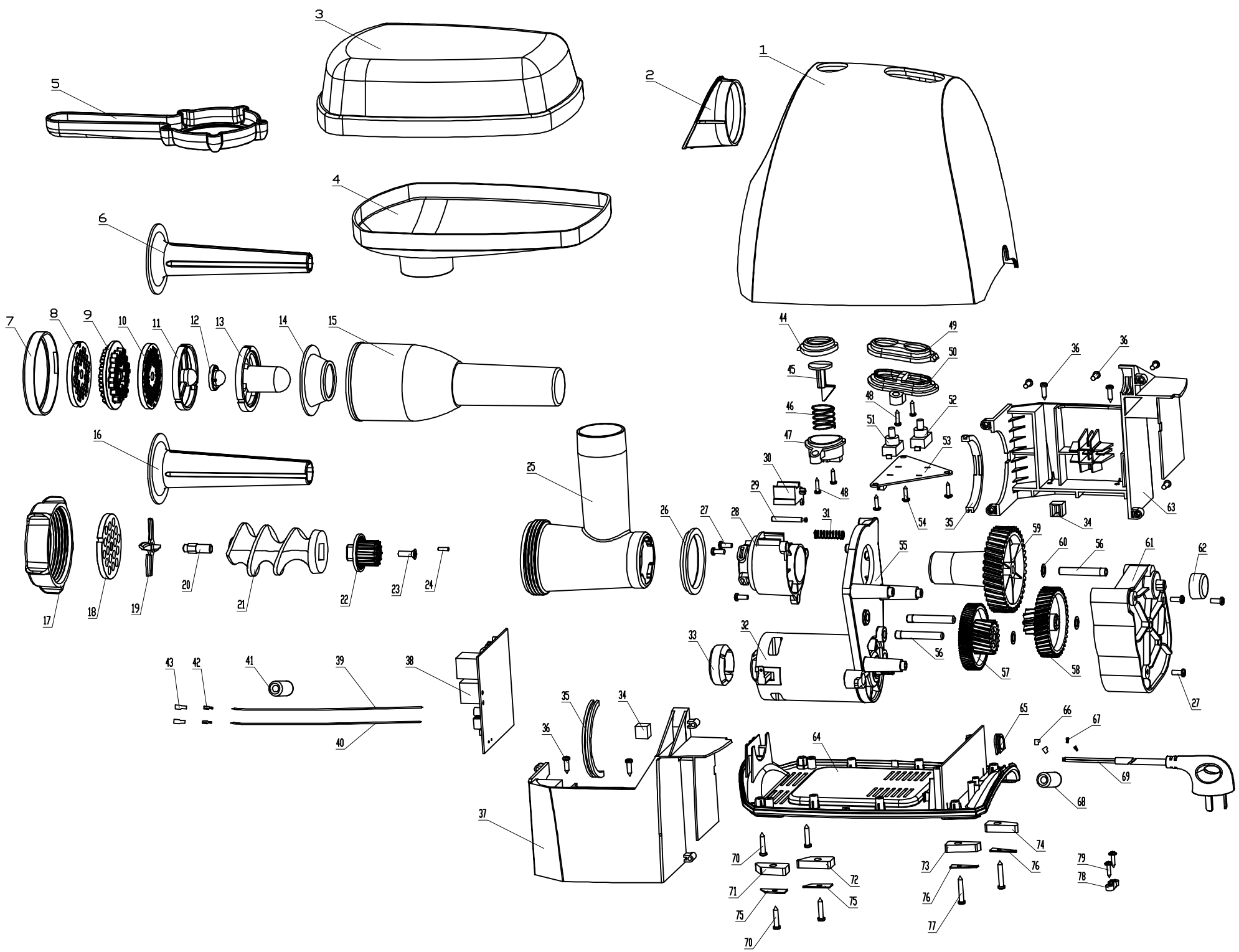

ITEM	DWG.NO	NAME	QTY	MAT'L&SPEC	REMARK
70		一字/十字槽平圆头螺钉 Screw	4	ST4x20/A/不锈钢	锁底座、锁胶脚A、B
69	MG5838-60-03	电源线 Power Cord	1	BKMT-F,2X0.75mm²;2.5 10A250VAC,Sealnum分断SJA插,L=1.2m	开用200mm,剩线5mm
68		磁管 Magnetic Tube	1	Ø14.0xØ6.35x28.5mm	
67		端子 Terminal	2	187/0.8旗型/铁镀镍	
66		端子套 Terminal Casing	2	187/0.8旗型端子护套,PVC	
65	MG5838-10-16	电源线插孔座 Notch Tach	1	ABS	
64	MG5838-10-02	底座 Base	1	ABS	
63	MG5838-10-05	左齿轮箱大身 Gearbox Housing L	1	防火PP(V0级)+25%滑石粉	
62	MG5808-40-02	胶垫-B Rubber Pad B	1	丁晴橡胶45-50度	借用MG5808
61	MG5808-10-14	齿轮盖 Gear Cover	1	PA+30%GF	借用MG5808
60	MG5808-80-08	平垫圈 Washer	3	Ø7.1xØ12.0x0.5mm/SUS304	借用MG5808
59	MG5808-10-07	齿轮3 Gear 3	1	POM	借用MG5808
58	MG5808-10-05	齿轮1 Gear 1	1	POM	借用MG5808
57	MG5808-10-06	齿轮2 Gear 2	1	POM	借用MG5808
56	MG5808-80-03	齿轮轴 Gear Shaft	3	Ø7.0x47mm/SUS303	借用MG5808
55	MG5808-30-01	马达支架 Motor Bracket	1	铝合金 Al Alloy	借用MG5808
54		一字/十字槽平圆垫圈头螺钉 Screw	3	ST3x10/A/碳钢镀彩锌	锁电子板组件2
53	MG5838-60-02	电子板组件2 PCB Ass'y-2	1	MG5838-2,240V/50Hz	
52		按钮开关2 Switch 1	1	KAN-J4-17(不带镀),T85,8(3)A/250V,VDE认证	(珠海拓林)
51		按钮开关1 Switch 1	1	KAN-J4-17(带镀),T85,8(3)A/250V,VDE认证	(珠海拓林)
50	MG5838-10-07	开关按钮座 Switch Button Bracket	1	ABS	
49	MG5838-40-01	开关按钮盖 Switch Button Cap	1	硅胶50-55度	
48		一字/十字槽平圆头螺钉 Screw	4	ST3x12/A/碳钢镀彩锌	锁开关按钮座、释放按钮座
47	MG5838-10-08	释放按钮座 Release Button Bracket	1	ABS	
46	MG5838-80-02	压缩弹簧 Spring	1	Ø21x21/65Mn/Ø1.0	
45	MG5838-10-17	释放按钮 Release Button	1	POM	
44	MG5838-40-02	释放按钮盖 Release Button Cap	1	硅胶50-55度	
43		端子套 Terminal Casing	2	187/0.8直插端子护套,PVC	
42		端子 Terminal	2	187/0.8直插/铁镀镍	
41		磁环 Magnetic Ring	1	Ø17.5xL28.5xØ9.5mm	通用XQ6997
40	MG5838-60-04	引线-2 Lead Wire-2	1	UL3122,18AWG,纤维线,300V,200° C,黑色	L=450mm
39	MG5838-60-04	引线-1 Lead Wire-1	1	UL3122,18AWG,纤维线,300V,200° C,棕色	L=450mm
38	MG5838-60-01	电子板组件1 PCB Ass'y-1	1	MG5838-1,240V/50Hz	带300mm长3PIN插排线
37	MG5838-10-06	右齿轮箱大身 Gearbox Housing R	1	防火PP(V0级)+25%滑石粉	
36		一字/十字槽平圆头螺钉 Screw	8	ST4x14/A/碳钢镀白锌	锁左右齿轮箱大身
35	MG5838-40-07	防震垫 Shockproof Pad	2	丁晴橡胶45-50度	
34	HM0816-4-01	马达脚垫 Motor Foot	1	丁晴橡胶45-50度	
33	MG5808-40-01	胶垫-A Rubber Pad A	1	丁晴橡胶45-50度	借用MG5808
32	MG5808-60-01	电机 Motor	1	240VDC600W	借用MG5808
31	MG5818-80-01	压缩弹簧 Spring	1	Ø6x27.8/65Mn/Ø0.5	借用MG5818
30	MG5838-10-18	释放按钮滑动块 Slide Button	1	POM	
29	MG5838-80-01	锁紧轴 Locket Shaft	1	Ø4x34.6/SUS303	
28	MG5808-10-08	齿轮支架 Gear Bracket	1	POM	借用MG5808
27		一字/十字槽平圆头螺钉 Screw	6	M4x10/碳钢镀彩锌	锁齿轮支架、锁齿轮盖
26	MG5808-40-03	胶垫-C Rubber Pad C	1	丁晴橡胶45-50度	借用MG5808
25	MG5808-30-02	绞肉杆支架 Ream Meat Staff Bracket	1	铝合金 Al Alloy	借用MG5808
24	MG5808-80-02	防转轴 Prevent Turning Shaft	1	Ø3x10/SUS303	借用MG5808
23		十字槽沉头螺钉 Screw	1	M5x16/不锈钢	锁传动轮
22	MG5808-10-13	传动轮 Transmission Wheel	1	POM	借用MG5808
21	MG5808-30-03	绞肉杆 Ream Meat Staff	1	铝合金 Al Alloy	借用MG5808
20	MG5808-80-01	绞肉杆接头 Knife Shaft	1	8x31.3mm/SUS303	借用MG5808
19	MG5808-80-07	刀片 Ream Meat Knife	1	Ø54.6x2.0mm/SUS420J2	借用MG5808
18	MG5838-80-03	刀盘A Ream Meat Knife Pan A	1	Ø61.5xØ8.0x5.0mm/SUS420J2	
17	MG5808-30-04	刀盖 Knife Case	1	铝合金 Al Alloy	借用MG5808
16	MG5808-10-17	火腿棒 Ham Sleeve	1	SAN	借用MG5808
15	MG5838-10-14	压杆 Press Staff	1	PP	
14	MG5838-10-10	凹肉饼模 Kibbe-C	1	PP	
13	MG5838-10-09	凸肉饼模 Kibbe-P	1	PP	
12	MG5838-10-19	肉饼套 Kibbe Nesting	1	PP	
11	MG5808-10-16	火腿棒支架 Ham Sleeve Bracket	1	POM	借用MG5808
10	MG5838-80-05	刀盘C Ream Meat Knife Pan C	1	Ø61.5xØ3.0x5.0mm/SUS420J2	
9	MG5838-40-08	胶塞 Screen Cleaner	1	硅胶40-45度	
8	MG5838-80-04	刀盘B Ream Meat Knife Pan B	1	Ø61.5xØ4.5x5.0mm/SUS420J2	
7	MG5838-10-15	压杆盖 Press Staff Cap	1	PP	
6	MG5838-10-12	小火腿棒 Ham Sleeve-L	1	PC	
5	MG5838-10-13	扳手 Spanner	1	PA+30%GF	
4	MG5838-10-04	漏斗 Filler	1	PP	
3	MG5838-10-03	漏斗盖 Filler Cover	1	SAN	
2	MG5838-10-11	搅肉杆支架套 Ream Meat Staff Collar	1	ABS	
1	MG5838-10-01	大身 Body	1	ABS	

ITEM	DWG.NO	NAME	QTY	MAT'L&SPEC	REMARK
80					
79		一字/十字槽平圆垫圈头螺钉 Screw	2	ST3x12/A/碳钢镀彩锌	锁压线码
78		压线码 Strain Relier	1	PP	通用HM848
77		一字/十字槽平圆头螺钉 Screw	2	ST4x25/A/不锈钢	锁铰接C、D/底座
76	MG5838-20-02	脚垫B Mat-B	2	t=1.0mm/SUS304	
75	MG5838-20-01	脚垫A Mat-A	2	t=1.0mm/SUS304	
74	MG5838-40-06	胶脚D Foot-D	1	硅胶65-70度	
73	MG5838-40-05	胶脚C Foot-C	1	硅胶65-70度	
72	MG5838-40-04	胶脚B Foot-B	1	硅胶65-70度	
71	MG5838-40-03	胶脚A Foot-A	1	硅胶65-70度	

技术要求

1 `额定电压 ：230V50Hz ；额定功率 ：600W
2 `噪音 ：小于85dB
3 `装配要求 ：外观件配合良好 ’各止口均匀
4 `开关接通电路后延时2秒启动电机

GUANGDONG DONGLING KITCHEN ENTERPRISE GROUP

MODEL: MG5838绞肉机(GS) Mincer		DWG.NO: MG5838-00-20	REV: A
TITLE: 爆炸图 Exploded Drawing		PREPARED BY:	DATE:
	SCALE:	CHECKED BY:	DATE:
	SHEET: 1 OF 1	STANDARD BY:	DATE:
	UNITS: mm	REVIEWED BY:	DATE:
	FRAME: A1	APPROVED BY:	DATE:

Form No. 01-165-C

PDF 文件使用 "pdfFactory Pro" 试用版本创建 www.fineprint.cn