Rev.	Description	Revised by	Approved by

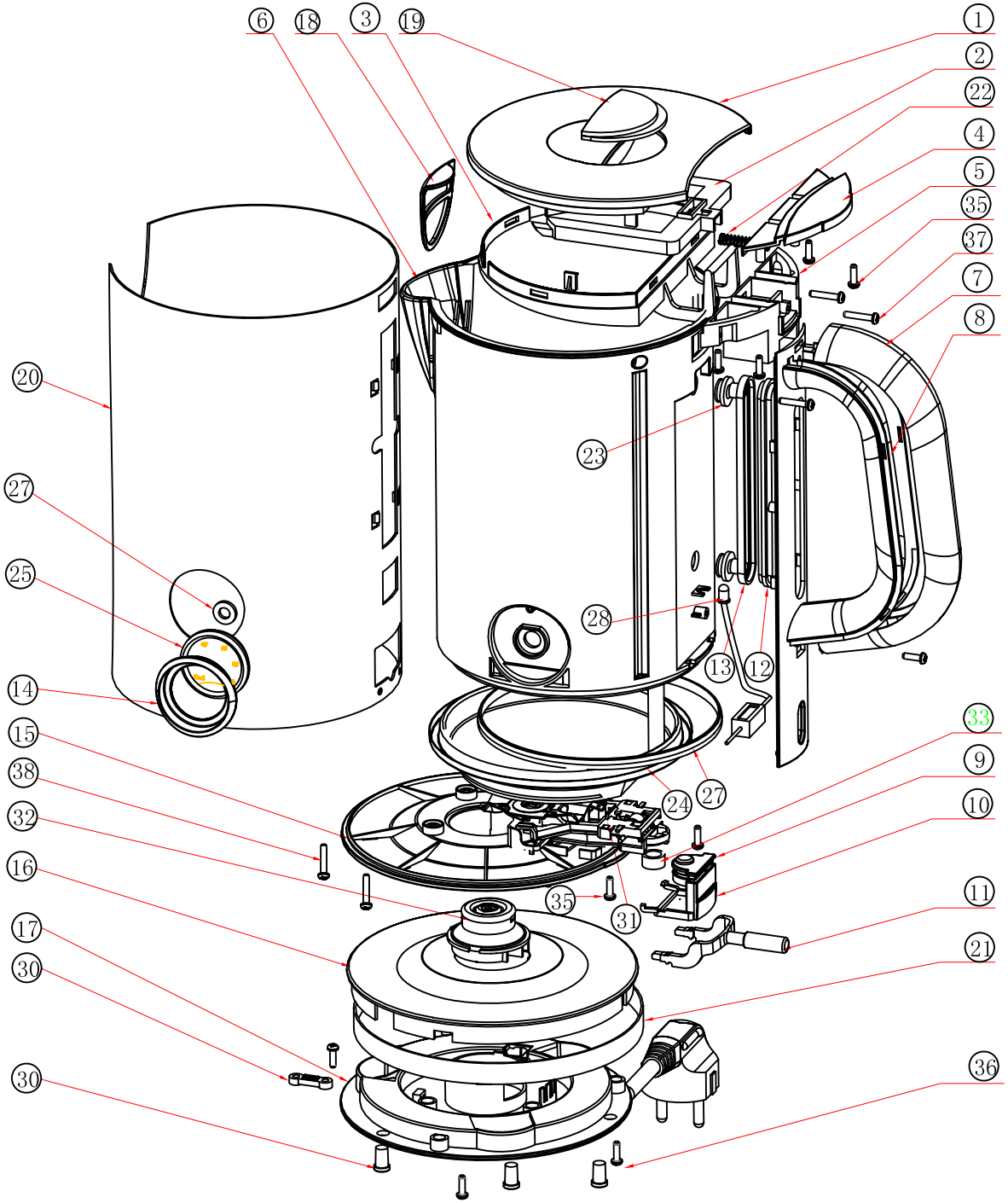

NO	DWG. NO	PART NAME	QTY	MATERIAL	REMARKS
37		SCREW PWHM3X21	3	PLATE NICKLE	
36		SCREW PM3X16	1	PLATE NICKLE	
36		SCREW PM3X10	9	PLATE NICKLE	
35		SCREW PM3X10	4	STAINLEE STEEL	
34		SCREW PM3X6	3	PLATE NICKLE	
33		CONNECTER PIPE	1	D12Xd8X6	silica gel
32		CORDLESS CONNECTOR	1	P72C	Strix
31		CONTROL	1	U1855	Strix
30	T322-81	FOOT	3	RUBBER	
29	T2171-114	CORD CLAMP	1	PP 1100NK	
28	WK8271-7401	DIODE LGHT	1		
27	WK8265-20	HEATER-SEAL	1	ASilica gel 50°	
26	WK8278-6101	SEAL RING OF WATCH	1	ASilica gel 50°	
25	WK8278-7101	THERMOMETER	1		
24	WK8271-7101	HEATER BOARD	1		
23	WK8271-6101	LEVEL SEAL	2	ASilica gel 50°	
22	WK8271-2103	SPRING	1	STAINLEE STEEL	
21	WK8271S-2102	ADORN RING	1	STEEL T=0.4	
20	WK8271S-2101	OUT SHELL	1	STEEL T=0.4	
19	WK8268-08	LID HANDLE	1	PP HJ730	
18	WK8271-3018	FILTER	1	PP HJ730	
17	WK8271-3017	POWERBASE DOWN	1	PP HJ730	
16	WK8271-3016	POWERBASE TOP	1	PP HJ730	
15	WK8271-3015	BASE	1	PP HJ730	
14	WK8271-3014	METER COVER	1	PC SR2000	
13	WK8271-3013	LEVEL BOTTOM	1	PC SR2000	
12	WK8271-3012	LEVEL COVER	1	PC SR2000	
11	WK8271-3011	SWITCH	1	PC SR2000	
10	WK8271-3010	STEAM BOX	1	PP HJ730	
9	WK8271-3009	STEAM COVER	1	PP HJ730	
8	WK8271-3008	HANDLE	1	PP HJ730	
7	WK8271-3007	HANDLE COVER	1	PP HJ730	
6	WK8271-3006	BODY	1	PP HJ730	
5	WK8271-3005	JOINT BOTTOM	1	PP HJ730	
4	WK8271-3004	JOINT COVER	1	PP HJ730	
3	WK8271-3003	LID DOWN	1	PP HJ730	
2	WK8271-3002	LID LOCK	1	PP HJ730	
1	WK8271-3001	LID TOP	1	PP HJ730	

Material:	DES. / /	EXPLODE	
	CHK. / /		
Finishing:	APP. / /	Drawing No. WK8271S-1002	
	Do not scale drawing	Size: A2	Sheet 1 Of 1
Unless otherwise specified dimentions are mm		HARVEST INDUSTRY LIMITED	