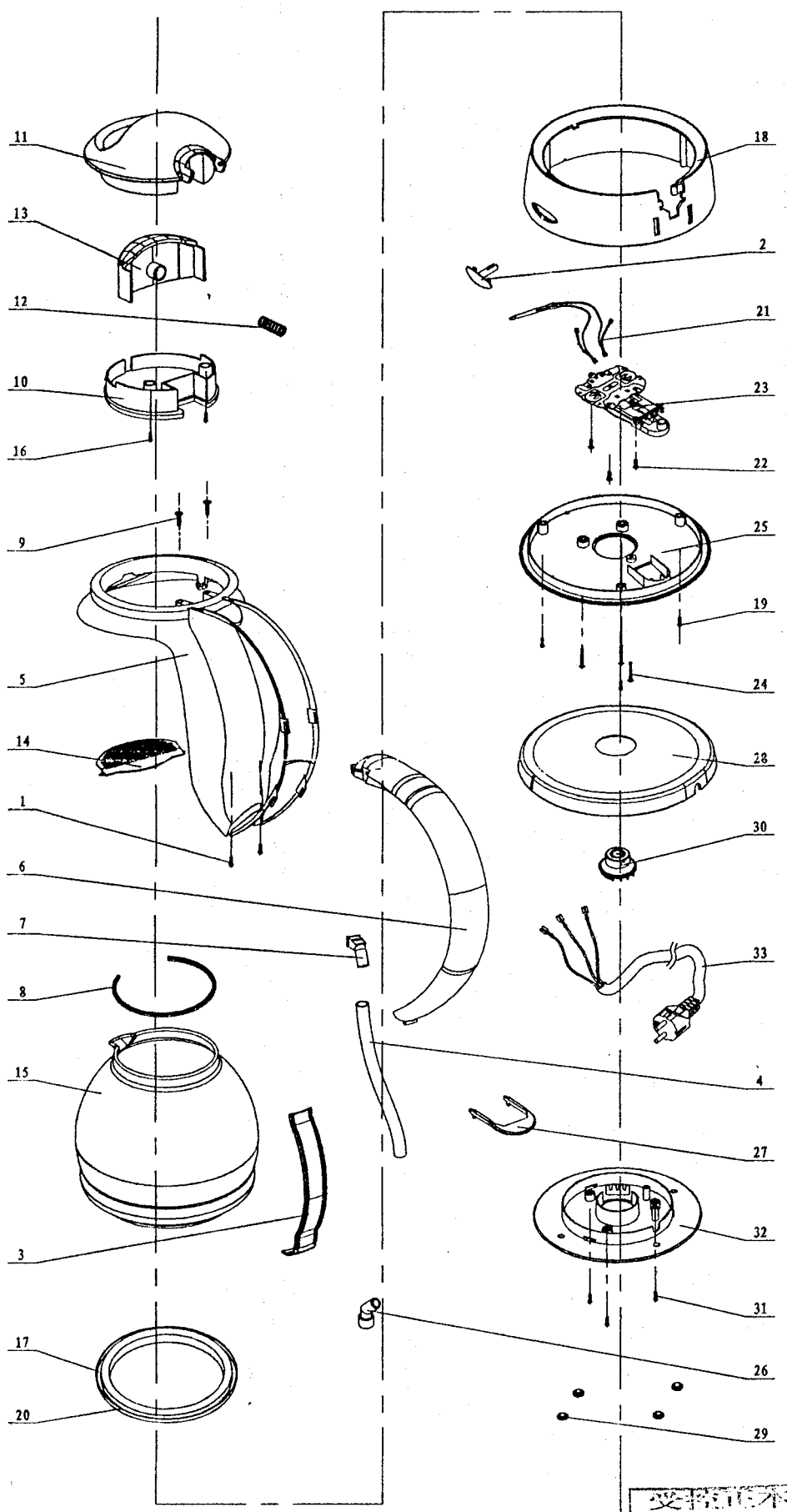


UNCONTROLLED COPY

| ITEM | NAME | DWG. NO | QUT. | MATERIAL&SPEC. | REMARK |
|---|---|---|---|---|---|
| 33 | 电缆组合件 POWER CAME ASS'Y | XB6995-27 | 1 | HOSVV-F 3G1.5MM² L=800mm | 含插头 |
| 32 | 下底座 BASE SLIRT | XB6995-14 | 1 | PP730L | |
| 31 | 螺钉 SCREW | | 3 | ST3X10 不锈钢 | 含一"H"头 |
| 30 | 电接触控器 CONTACTOR FOR CONTROL | | 1 | PT2 | STRIX |
| 29 | 橡胶脚 RUBBER FOOT | XB6995-23 | 4 | 橡胶 | |
| 28 | 上底座 BASE SKIRT | XB6995-13 | 1 | PP730L | |
| 27 | 开关 ACTUATOR | XB6995-16 | 1 | PA+15%GF | |
| 26 | 蒸汽接口 STEAM CONNECTING | XB6178A-07 | 1 | PP730L | 借用6178A |
| 25 | 底盘 BOTTOM COVER | XB6995-12 | 1 | PP730L | |
| 24 | 螺钉 SCREW | | 3 | M3X20 不锈钢 | 含一"H"头 |
| 23 | 温控器 THERMOSTAT CONTROL | | 1 | U1831 | STRIX |
| 22 | 螺钉 SCREW | | 3 | M3X6 不锈钢 | 带介 |
| 21 | 灯泡组件 LIGHT ASS'Y | XB6995-28 | 1 | | |
| 20 | 发热管 HEATING ELEMENT | XB6995-26 | 1 | 220-240V/2520W-2000W不锈钢 | |
| 19 | 螺钉 SCREW | | 3 | ST3X10 不锈钢 | |
| 18 | 底座 BOTTOM | XB6998-08 | 1 | PP730L | |
| 17 | 硅胶条 GLUE | | | 圆筒状耐硅玻璃纤维或硅胶 | RTV-108 |
| 16 | 螺钉 SCREW | | 2 | ST3X10 不锈钢 | |
| 15 | 玻璃杯 GLASS BODY | XB6995-22 | 1 | 玻璃 | |
| 14 | 滤网 FILTER | XB6998-06 | 1 | PP730L | |
| 13 | 锁盖滑块 LID LOCK | XB6998-02 | 1 | PP730L | |
| 12 | 弹簧 SPRING | XB6998-09 | 1 | ø8.8X27不锈钢 | |
| 11 | 锅盖 LID | XB6998-03 | 1 | PP730L | |
| 10 | 锅盖盖板 LID COVER | XB6998-05 | 1 | PP730L | |
| 9 | 螺钉 SCREW | | 2 | ST3X10不锈钢 | 沉头 |
| 8 | 密封圈 SEALING RING | XB6995-21 | 1 | 硅胶 | |
| 7 | 上接头 STEAM CONNECTING | XB6998-06 | 1 | PP730L | |
| 6 | 手柄盖 HANDLE COVER | XB6998-02 | 1 | PP730L | |
| 5 | 手柄盖 HANDLE | XB6998-01 | 1 | PP730L | |
| 4 | 硅胶管 SILICONE PIPE | XB6995-24 | 1 | ø10Xø14X180 硅胶 | |
| 3 | 铭牌 IN-LIPLATE | XB6998-07 | 1 | PP730L | |
| 2 | 灯罩 LAMP COVER | XB6995-15 | 1 | PC | |
| 1 | 螺钉 SCREW | | 2 | ST3X10不锈钢 | 带介 |

SUNBOW ELECTRICAL EQUIPMENTS CO., LTD

MODEL: XB6998 6k 1800

TITLE: 爆炸图

DOC. NO.: 03-TD-010 A1

TYPE: ME PL PU ASS'Y PACK'G

P/N: REV: A

SCALE: 2:1 MAT'L:

DRAWING RELEASED FOR:
- FINAL PRODUCTION
- PILOT PRODUCTION
- TOOLING MODIFICATION
- NEW TOOLING
- QUOTATION & SAMPLE
- DESIGN GUIDE

PREPARED BY: DATE: 2001.12.31
CHECKED BY: DATE: 2002-01
REVIEWED BY: DATE:
APPROVED BY: DATE:

受控文件
01 FEB 2002